B. TECH. PROGRAM CURRICULUM - 2025

(Applicable for the batches admitted from A.Y 2025-26)

Version 2.0

ELECTRONICS AND COMMUNICATION ENGINEERING

Version 1.0–Approved in the BoS meeting on 17-05-2025 & Academic Council meeting on 14-06-2025

Version 2.0–Approved in the BoS meeting on 06-06-2026 & Academic Council meeting on 20-06-2026

ADITYA UNIVERSITY

Aditya Nagar, ADB Road, Surampalem - 533 437

ADITYA UNIVERSITY

Department of Electronics and Communication Engineering

Vision:

To be a recognized centre of excellence in Electronics and Communication Engineering through quality education, innovation, and research to meet societal and industrial needs.

Mission:

M1: Delivering a robust industry aligned curriculum that empowers students to achieve global excellence.

M2: Providing state-of-the-art infrastructure that fosters innovation, critical thinking, and interdisciplinary research.

M3: Inculcating technical and entrepreneurial skills to provide socially relevant and sustainable solutions.

Program Educational Objectives:

Graduates will

PEO1: Design and develop modern electronic and communication systems with professional ethics, environmental sustainability, and social responsibility.

PEO2: Pursue successful professional careers and higher studies by cultivating a learning mindset, engaging in innovative research, and embracing lifelong learning.

PEO3: Demonstrate effective communication, leadership, and adaptability to excel in diverse, multidisciplinary, and collaborative environments.

Program Specific Outcomes:

PSO 1: Design and implement sustainable and energy-efficient solutions in Communication and Signal Processing to address societal and industrial needs.

PSO 2: Apply advanced technologies in VLSI Design and Embedded Systems to develop innovative solutions and enhance professional competence.

PROGRAM OUTCOMES (PO's)

The 11 Program Outcomes are described as below.

After successful completion of the program, the graduates will be able to

PO1 **Engineering knowledge:** Apply the knowledge of mathematics, science, engineering fundamentals, and an engineering specialization to the solution of complex engineering problems.

PO2 **Problem analysis:** Identify, formulate, review research literature, and analyze complex engineering problems reaching substantiated conclusions using first principles of mathematics, natural sciences, and engineering sciences

PO3 **Design/development of solutions**: Design solutions for complex engineering problems and design system components or processes that meet the specified needs with appropriate consideration for the public health and safety, and the cultural, societal, and environmental considerations

PO4 **Conduct investigations of complex problems**: Use research-based knowledge and research methods including design of experiments, analysis and interpretation of data, and synthesis of the information to provide valid conclusions

PO5 **Engineering tool usage:** Create, select, and apply appropriate techniques, resources, and modern engineering and IT tools including prediction and modeling to complex engineering activities with an understanding of the limitations

PO6 **The Engineer and the world :** Apply reasoning informed by the contextual knowledge to assess societal, health, safety, legal and cultural issues and the consequent responsibilities relevant to the professional engineering practice

PO7 **Ethics:** Apply ethical principles and commit to professional ethics and responsibilities and norms of the engineering practice

PO8 **Individual and collaborative teamwork**: Function effectively as an individual, and as a member or leader in diverse teams, and in multidisciplinary settings

PO9 **Communication:** Communicate effectively on complex engineering activities with the engineering community and with society at large, such as, being able to comprehend and write effective reports and design documentation, make effective presentations, and give and receive clear instructions.

PO10 **Project management and finance:** Demonstrate knowledge and understanding of the engineering and management principles and apply these to one's own work, as a member and leader in a team, to manage projects and in multidisciplinary environments.

PO11 **Life-long learning**: Recognize the need for and have the preparation and ability to engage in independent and life-long learning in the broadest context of technological change.

Department Electronics and Communication Engineering

B. Tech (ECE) Program Curriculum -2025

(Applicable for the Batches admitted from A.Y 2025-26)

UG Programs Offered

- B. Tech in (Electronics and Communication Engineering)
- B. Tech in (Electronics and Communication Engineering) with
  - Minor degree in Civil Engineering
  - Minor degree in Electrical and Electronics Engineering
  - Minor degree in Mechanical Engineering
  - Minor degree in Computer Science and Engineering
  - Minor degree in Data Science
  - Minor degree in Artificial Intelligence and Machine Learning
  - Minor degree in Mining Engineering
  - Minor degree in Petroleum Technology
  - Minor degree in Agricultural Engineering
  - Minor degree in Entrepreneurship Development and Incubation
  - Minor degree in Quantum Technologies
- Minor Streams offered in B. Tech (Electronics and Communication Engineering)
  - Minor Stream in VLSI
  - Minor Stream in Embedded Systems
  - Minor Streamin Signal Processing and Communication Technology
  - Minor Stream in Space Technology
  - Minor Stream in Technology for Digital Resilience Industry Integrated Program- L & T
  - Minor Stream in Smart Infrastructure (Electronics) Industry Integrated Program- L & T

Credit Division Category-wise

S.No	Broad Category of Courses	UGC	Credits
1	Major Core Courses (MCC)	80	81
2	Minor Stream Courses (MSC) Or Minor Stream Courses (Min 20 credits) and University Open Elective Courses (UEC) (upto 12 Credits)	32	32
3	Multidisciplinary Courses (MDC)	9	6
4	Ability Enhancement Courses (AEC)	8	9
5	Skill Enhancement Courses (SEC)	9	10
6	Value Added Courses (VAC)	6-8	7
7	Summer Internships (SI)	2-4	4
8	Full Semester Internship (PROJ)	12	12
9	Mandatory Courses (MC)		0
Total Credits to be earned for B.Tech Degree		**160**	**161**

Foundation Courses – FC

Intermediate-level Courses - IC

Advanced Courses - AC

Major Core Courses (MCC)

Course Code	Course Name	Level	L	T	P	C	CIE	SEE	Total	Pre-requisite
2501MA01	Linear Algebra & Calculus	FC	2	1		3	50	50	100	-
2501MA02	Differential Equations & Vector Calculus	FC	2	1		3	50	50	100	-
2501MA07	Transform Calculus	FC	2	1		3	50	50	100	LAC, DEVC
2501CH02	Applied Chemistry	FC	2		1	3	50	50	100	-
2501PH02	Modern Physics	FC	2		1	3	50	50	100	-
2501CS01 / 2601DS01	Programming for Problem Solving Using C* / Problem Solving Through C Programming#	FC	2		2	4	50	50	100	-
2501IT01/ 2601AI01	Business Intelligence Lab* / Business Intelligence & AI Tools Lab#	FC			2	2	50	50	100	-
2501ME01	Engineering Graphics	FC	1		2	3	50	50	100	-
2501ME03	Engineering Workshop	FC			1	1	100	-	100	-
2501EE01	Basic Electrical & Electronics Engineering	FC	2		2	4	50	50	100	-
2501EC02	Network Analysis	FC	3	1		4	50	50	100	-
2501EC15	Digital Electronics	FC	2		2	4	50	50	100	-
2501EC03	Electronic Devices & Circuits	FC	2		2	4	50	50	100	BEEE
2501EC04	Random Variables & Stochastic Processes	FC	3	1		4	50	50	100	-
2501EC14	Signals & Systems	FC	2	1	1	4	50	50	100	-

2501EC05	Electromagnetic Waves & Transmission Lines	IC	2	1		3	50	50	100	DEVC
2501EC06	Analog Electronics	IC	2		2	4	50	50	100	EDC
2501EC07	Integrated Circuits & Applications	IC	2		2	4	50	50	100	EDC
2501EC08	Linear Control Systems	IC	2	1		3	50	50	100	S&S
2501EC09	Analog & Digital Communications	IC	2	1	1	4	50	50	100	S&S
2501EC10	Digital Signal Processing	IC	2		1	3	50	50	100	S&S
2501EC11	VLSI Design	IC	2		2	4	50	50	100	EDC
2501EC12	Microprocessors & Microcontrollers	AC	2		1	3	50	50	100	DE
2501EC13	Antenna &Microwave Engineering	AC	2		2	4	50	50	100	EMTL
Total			**45**	**9**	**27**	**81**				

Multi-Disciplinary Courses (MDC)

Course Code	Course Name	Level	L	T	P	C	CIE	SEE	Total	Pre-requisite
2501CS03/ 2601DS02	Data Structures* / Data Structures using C++#	FC	2		2	4	50	50	100	PPSC
2501MB01	Engineering Economics & Management	FC	2			2	50	50	100	-
	Total		**4**		**2**	**6**				

Ability Enhancement Courses (AEC)

Course Code	Course Name	Level	L	T	P	C	CIE	SEE	Total	Pre-requisite
2501EN01	Essential Cognitive Skills for Engineering	FC			1	1	100	-	100	-
2501EN02	Advanced Cognitive Skills for Engineering	FC			1	1	100	-	100	-
2501UC07	Design Thinking using AI	FC			1	1	100	-	100	-
2501UC08	Universal Human Values	FC	2			2	100	-	100	-
2501UC09	Technical Paper Publication	AC			2	2	100	-	100	-
2501EC96	Student Activity Based Learning	AC				2	100	-	100	-
Total			**2**		**5**	**9**				

Skill Enhancement Courses (SEC)

Course Code	Course Name	Level	L	T	P	C	CIE	SEE	Total	Pre-requisite
2501EC21	PCB Design	FC			2	2	50	50	100	-
2501EC94	Soft Computing Tools	IC			2	2	50	50	100	-
2501CS90	Object Oriented Programming through JAVA	AC			2	2	50	50	100	PPSC
2501EC16	ECAD Tools	AC			2	2	50	50	100	VLSI
2501EC17	Verification using Verilog & UVM	AC			2	2	50	50	100	VLSI
Total					**10**	**10**				

Value Added Courses (VAC)

Course Code	Course Name	Level	L	T	P	C	CIE	SEE	Total	Pre-requisite
2501CS04	Internet of Things	FC			1	1	50	50	100	-
2501CS02	Data Analysis Using Python	IC			2	2	50	50	100	PPSC
2501UC11	Employability Skills-I	FC			3	0	100	-	100	-
2501UC13	Employability Skills-II	FC			3	0	100	-	100	ES-I
2501UC14	Employability Skills-III	IC			3	0	100	-	100	ES-II
2501UC15	Employability Skills-IV	IC			3	0	100	-	100	ES-III
2501UC16	Employability Skills-V	AC			3	1	100	-	100	ES-IV
2501CS10 / 2501CS92	Advanced Data Structures & Algorithm Analysis / Data Structures using C$	AC	2		1	3	100	-	100	DS
Total			**2**		**19**	**7**				

Summer Internships (SI)

Course Code	Course Name	Level	L	T	P	C	CIE	SEE	Total	Pre-requisite
2501EC18	Summer Internship-I	IC			2	2	100	-	100	-
2501EC19	Summer Internship-II	AC			2	2	100	-	100	-
Total					**4**	**4**				

Full Semester Internship (PROJ)

Course Code	Course Name	Level	L	T	P	C	CIE	SEE	Total	Pre-requisite
2501EC20	Full Semester Internship	AC			12	12	50	50	100	-
Total					**12**	**12**				

Mandatory Courses (MC)

Course Code	Course Name	Level	L	T	P	C	CIE	SEE	Total	Pre-requisite
2501AC01	Environmental Science	FC	2			0	100	-	100	-
2501AC02	Constitution of India	FC	2			0	100	-	100	-
2501AC03	Research Methodology	FC	2			0	100	-	100	-
2501AC04	Intellectual Property Rights & Patents	FC	2			0	100	-	100	-
2501AC05	Indian Knowledge Systems	FC	2			0	100	-	100	-
	Total		**10**			**0**				

Minor Stream: VLSI

Course Code	Minor Stream Course	level	L	T	P	C	CIE	SEE	Total	Pre-requisite
2501EC86	Digital System Design through Verilog	IC	2		1	3	50	50	100	DE
2501EC26	Digital Design through system Verilog	AC	2		1	3	50	50	100	DDTV
2501EC23	CMOS Digital IC Design	IC	2	1		3	50	50	100	DE
2501EC27	FPGAs & ASIC Design	AC	3			3	50	50	100	DDTV
2501EC22	Design For Testability	IC	3			3	50	50	100	DDTV
2501EC30	Testing & Verification of VLSI Circuits	IC	3			3	50	50	100	VLSI
2501EC24	Analog VLSI Design	IC	2	1		3	50	50	100	VLSI
2501EC28	Low Power VLSI Design	AC	2	1		3	50	50	100	VLSI
2501EC29	SoC Design	AC	3			3	50	50	100	MPMC
2501EC25	CMOS Mixed signal IC Design	AC	2		1	3	50	50	100	CDIC, AVLSI
2501EC31	VLSI Physical Design	AC	2			2	50	50	100	LPVLSI
	Total		**26**	**3**	**3**	**32**				

Minor Stream: Embedded Systems

Course Code	Course Name	Level	L	T	P	C	CIE	SEE	Total	Pre-requisite
2501EC37	Sensors & Actuators	FC	3			3	50	50	100	-
2501EC40	Embedded C	IC	2		1	3	50	50	100	-
2501EC36	Hardware interfacing & Networking	IC	3			3	50	50	100	-
2501EC38	Microcontrollers for Embedded Systems	IC	3			3	50	50	100	MPMC
2501EC32	Embedded Real Time Systems	AC	3			3	50	50	100	-
2501EC42	Wireless LANs & PANs	IC	3			3	50	50	100	-
2501EC39	System Programming	AC	3			3	50	50	100	-
2501EC34	Embedded System Design	AC	3			3	50	50	100	-
2501EC41	Real Time operating System using QNX	AC	0	0	2	2	50	50	100	ERTS
2501EC33	Machine Learning for Embedded Systems	AC	3			3	50	50	100	-
2501EC35	Hardware & Software Co-Design	AC	3			3	50	50	100	-
	Total		**29**		**3**	**32**				

Minor Stream: Signal Processing and Communication Technology

Course Code	Course Name	Level	L	T	P	C	CIE	SEE	Total	Pre-requisite
2501EC45	Fundamentals of Speech Processing	IC	2		1	3	50	50	100	S&S
2501EC46	Information Theory & Coding Techniques	IC	2		1	3	50	50	100	-
2501EC44	Digital Signal Processors & Architectures	IC	2	1		3	50	50	100	DSP
2501EC43	Digital Image Processing	IC	2		1	3	50	50	100	S&S
2501EC49	Radar Engineering	IC	3			3	50	50	100	ADCM
2501EC51	Soft Computing Techniques	AC	2	1		3	50	50	100	-
2501EC47	Optical Communications	AC	3			3	50	50	100	ADCM
2501EC50	Satellite Communications	AC	3			3	50	50	100	ADCM
2501EC48	Pattern Recognition	AC	2			2	50	50	100	DIP
2501EC52	Wireless Communications	AC	2	1		3	50	50	100	ADCM
2501EC53	Wireless Sensor Networks	AC	3			3	50	50	100	IOT
Total			**26**	**3**	**3**	**32**				

Minor Stream: Space Technology

Course Code	Course Name	Level	L	T	P	C	CIE	SEE	Total	Pre-requisite
2501EC54	Introduction to Space Laws	IC	3			3	50	50	100	-
2501EC55	Aircraft Communication Systems	IC	2	1		3	50	50	100	-
2501EC57	Aircraft Navigation Systems	IC	3			3	50	50	100	-
2501EC62	Missile & Space Vehicle Guidance & Control	IC	2			2	50	50	100	-
2501EC60	Flight Control Systems	IC	3			3	50	50	100	-
2501EC58	Avionics Embedded Systems	IC	2	1		3	50	50	100	-
2501EC59	Avionics Network Technology	AC	3			3	50	50	100	-
2501EC64	Unmanned Aircraft Systems	AC	3			3	50	50	100	-
2501EC56	Aerospace Electromagnetic Compatibility	AC	2	1		3	50	50	100	-
2501EC61	Global Navigation Satellite Systems & Applications	AC	3			3	50	50	100	SC
2501EC63	Remote Sensing & Digital Image Processing of Satellite Data	AC	3			3	50	50	100	DIP
Total			**29**	**3**		**32**				

Minor Stream: Technology for Digital Resilience
Industry Integrated Program- L & T

Course Code	Course Name	Level	L	T	P	C	CIE	SEE	Total	Pre-requisite
2501EC66	Software Defined Radio	IC	3	1		4	50	50	100	-
2501EC67	Introduction to Internet of Things	IC	2		1	3	50	50	100	-
2501EC68	Cloud based Internet of Things	IC	2		2	4	50	50	100	IIoT
2501EC69	Cyber Defence & Information Security	IC	3			3	50	50	100	-
2501EC70	Industrial Applications of Microcontrollers - A Practice based approach	IC	3			3	50	50	100	-
2501EC65	Applied Industrial IoT	IC	3			3	50	50	100	-
2501EC71	Data Engineering, Analytics & Security in Industries	AC	3			3	50	50	100	-
2501EC72	Cloud Adoption & Management Techniques	AC	3			3	50	50	100	-
2501EC73	Artificial Intelligence & Edge Computing	AC	3			3	50	50	100	-
2501EC74	Modern Wireless Communications	AC	3			3	50	50	100	-
Total			**28**	**1**	**3**	**32**				

#Syllabus for the industry partner courses will be released in the department as and when Required.

Minor Stream: Smart Infrastructure (Electronics)
Industry Integrated Program- L & T

Course Code	Course Name	Level	L	T	P	C	CIE	SEE	Total	Pre-requisite
2501EC75	Digital Data Communications	IC	3		1	4	50	50	100	-
2501EC76	Introduction to Machine Learning	IC	3		1	4	50	50	100	-
2501EC77	Sensors & Transducers	IC	3			3	50	50	100	-
2501EC78	Cyber Physical Systems for Industrial Applications	IC	3			3	50	50	100	-
2501EC65	Applied Industrial IoT	IC	3			3	50	50	100	-
2501EC79	Drone Technology and its Transformative Applications- A Practitioner's Perspective	IC	3			3	50	50	100	-
2501EC73	Artificial Intelligence and Edge Computing	AC	3			3	50	50	100	-
2501EC80	5G Technology for Smarter & Secure Connectivity	AC	3			3	50	50	100	-
2501EC74	Modern Wireless Communications	AC	3			3	50	50	100	-
2501EC81	Chip based VLSI Design for Industrial Applications	AC	3			3	50	50	100	-
Total			**30**		**2**	**32**				

#Syllabus for the industry partner courses will be released in the department as and when Required.

UNIVERSITY OPEN ELECTIVE COURSES

Branch	Course Code	Course Name	Level	L	T	P	C	CIE	SEE	Offered to	Pre-requisite
CE	2501CE66	Natural Disaster Management & Mitigation		3	0	0	3			EEE, ME, ECE, CSE, IT, AIML, CSE(DS) PT, Min.E	
CE	2501CE81	Wastewater Management		3	0	0	3			EEE,ME, ECE, CSE,IT, AIML, CSE(DS) PT,Min.E	
CE	2501CE82	Integrated Solid Waste Management for a Smart City		3	0	0	3			EEE,ME, ECE, CSE,IT, AIML, CSE(DS) PT,Min.E	
CE	2501CE83	Watershed Management		3	0	0	3			EEE,ME, ECE, CSE,IT, AIML, CSE(DS) PT,Min.E	
EEE	2501EE53	Electric Power Generation, TransmissionC Distribution Systems	AC	3	0	0	3	50	50	CE, ME, ECE, CSE,IT, AIML, CSE(DS) PT,Min.E	
EEE	2501EE36	Electric Energy Storage Systems	FC	3	0	0	3	50	50	CE,ME, ECE, CSE,IT, AIML, CSE(DS) PT,Min.E	
EEE	2501EE43	Electrical safety	IC	3	0	0	3	50	50	CE,ME, ECE, CSE,IT, AIML, CSE(DS) PT,Min.E	
EEE	2501EE54	Hybrid & Electric Vehicles	IC	3	0	0	3	50	50	CE,ECE, CSE,IT, AIML, CSE(DS) PT,Min.E	
ME	2501ME37	Solar Energy Systems	FC	3			3	50	50	CE,EEE, ECE, CSE,IT, AIML, CSE(DS) PT, Min.E	
ME	2501ME58	Industry 5.0 for Engineers	AC	3			3	50	50	CE,EEE, ECE, CSE,IT, AIML, CSE(DS) PT, Min.E	
ME	2501ME73	Organizational Behavior	FC	3			3	50	50	CE,EEE, ECE, CSE,IT, AIML, CSE(DS) PT, Min.E	
ME	2501ME36	Sustainable Energy Systems	FC	3			3	50	50	CE,EEE, ECE, CSE,IT, AIML, CSE(DS) PT, Min.E	
ECE	2501EC97	Biomedical Electronics	FC	3			3	50	50	CE,EEE, ME, CSE, IT, DS, AIML, PT, Min.E, Ag.E	
ECE	2501EC98	Fundamentals of Wireless Communications	FC	3			3	50	50	CE,EEE, ME, CSE, IT, DS, AIML, PT, Min.E, Ag.E	

ECE	2501EC99	Principles of Embedded Systems	FC	3			3	50	50	CE,EEE, ME, CSE, IT, DS, AIML, PT, Min.E, Ag.E	
ECE	2501ECA0	Electronics for Healthcare	FC	3			3	50	50	CE,EEE, ME, CSE, IT, DS, AIML, PT, Min.E, Ag.E	
ECE	2501ECA1	Basics of VLSI Design	FC	3			3	50	50	CE, EEE, ME, CSE, IT, DS, AIML, PT, Min.E, Ag.E	
ECE	2501ECA2	System on Chip Design	FC	3			3	50	50	CE, EEE, ME, CSE, IT, DS, AIML, PT, Min.E, Ag.E	
ECE	2501ECA3	Introduction to Quantum Computing	FC	3			3	50	50	CE,EEE, ME, CSE, IT, DS, AIML, PT, Min.E, Ag.E	
CSE	2501CS03/ 2601DS02	Data Structures* / Data Structures using C++#	FC	2		2	4	50	50	CE, ME, PT, Min.E	PPSC
CSE	2501CS13	Operating Systems	IC	2		1	3	50	50	CE, EEE, ME, ECE, PT, Min.E, Ag.E	-
IT	2501IT05	Database Management Systems	IC	2		2	4	50	50	CE, EEE, ME, ECE, PT, Min.E,Ag.E	PPSC / CP&DS
IT	2501CS07	Computer Networks	AC	3			3	50	50	CE, EEE, ME, ECE, PT, Min.E,Ag.E	-
AI&ML	2501AI02	Artificial Intelligence	FC	2		1	3	50	50	CE, EEE, ECE, PT, Min.E	-
AI&ML	2501AI05	Machine Learning	AC	2		2	4	50	50	CE, ECE, PT, Min.E	DAUP
DS	2501CS34	Fundamental of Data Science	FC	2		1	3	50	50	CE, EEE, ME, ECE, PT, Min.E,Ag.E	PPSC / CP&DS

Note: *Courses are applicable only to students admitted in the year 2025.
#Courses are applicable to the students admitted from the year 2026 onwards.
$ Courses are applicable to the Lateral Entry students.
All the other courses are applicable to students admitted from the year 2025 onwards.

B.Tech (ECE) Program Curriculum
Pre-requisite Flowchart

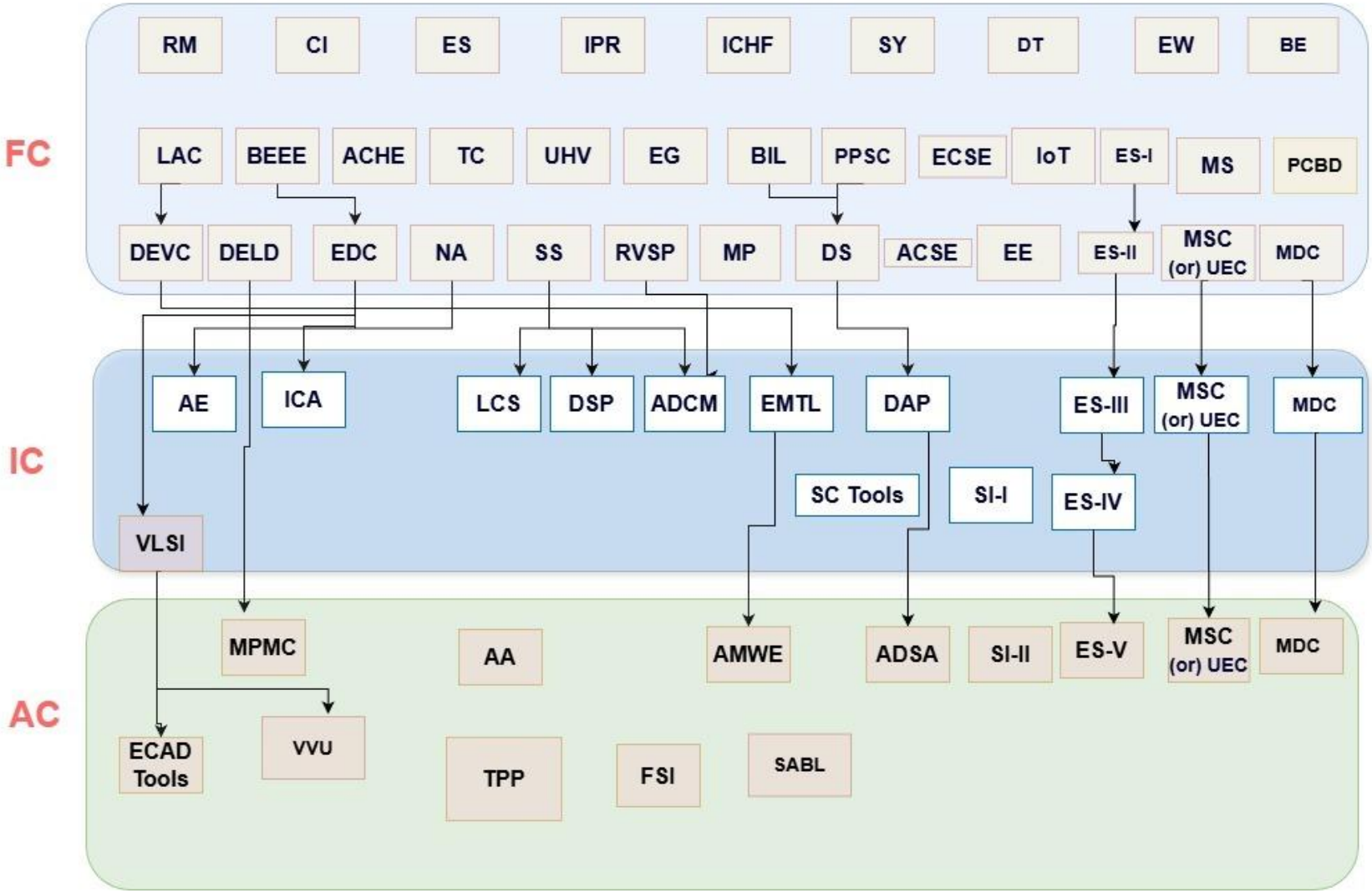

FOUNDATION COURSES		INTERMEDIATE-LEVEL COURSES		ADVANCED COURSES	
LAC	Linear Algebra & Calculus	EMTL	Electromagnetic Waves & Transmission Lines	MPMC	Microprocessors & Microcontrollers
DEVC	Differential Equations & Vector Calculus	AE	Analog Electronics	AMWE	Antenna & Microwave Engineering
TC	Transform Calculus	ICA	Integrated Circuits & Applications	DIP	Digital Image Processing
ACHE	Applied Chemistry	LCS	Linear Control Systems	AA	Android Applications
MP	Modern Physics	ADCM	Analog & Digital Communications	ECAD	ECAD Tools
PPSC	Programming for Problem Solving Using C	DSP	Digital Signal Processing	VVU	Verification using Verilog & UVM
				ADSA	Advanced Data Structures & algorithm analysis
BIL	Business Intelligence Lab	DAP	Data Analysis Using Python	SI-II	Summer Internship-II
PCBD	PCB Design	VLSI	VLSI	TPP	Technical Paper Publication
EG	Engineering Graphics	SC Tools	Soft Computing Tools	FSI	Full Semester Internship
EW	Engineering Workshop	SI-I	Summer Internship-I	ES-V	Employability Skills-V
BEEE	Basic Electrical & Electronics Engineering	ES-III	Employability Skills-III	SABL	Student Activity based Learning
NA	Network Analysis	ES-IV	Employability Skills-IV		
DE	Digital Electronics				
EDC	Electronic Devices & Circuits				
RVSP	Random Variables & Stochastic Processes				
SS	Signals & Systems				
ECSE	Essential Cognitive Skills for Engineers				
ACSE	Advanced Cognitive Skills for Engineers				
DT	Design Thinking using AI				
UHV	Universal Human Values				
IOT	Internet of Things				
EEM	Engineering Economics &Management				
MS	Management Science				
DS	Data Structures				

ES	Environmental Science
COI	Constitution of India
RM	Research Methodology
IPR	Intellectual Property Rights & Patents
ES-I	Employability Skills-I
ES-II	Employability Skills-II
BE	Biology for Engineers

B.Tech (ECE) Minor Stream
Pre-requisite Flow Chart

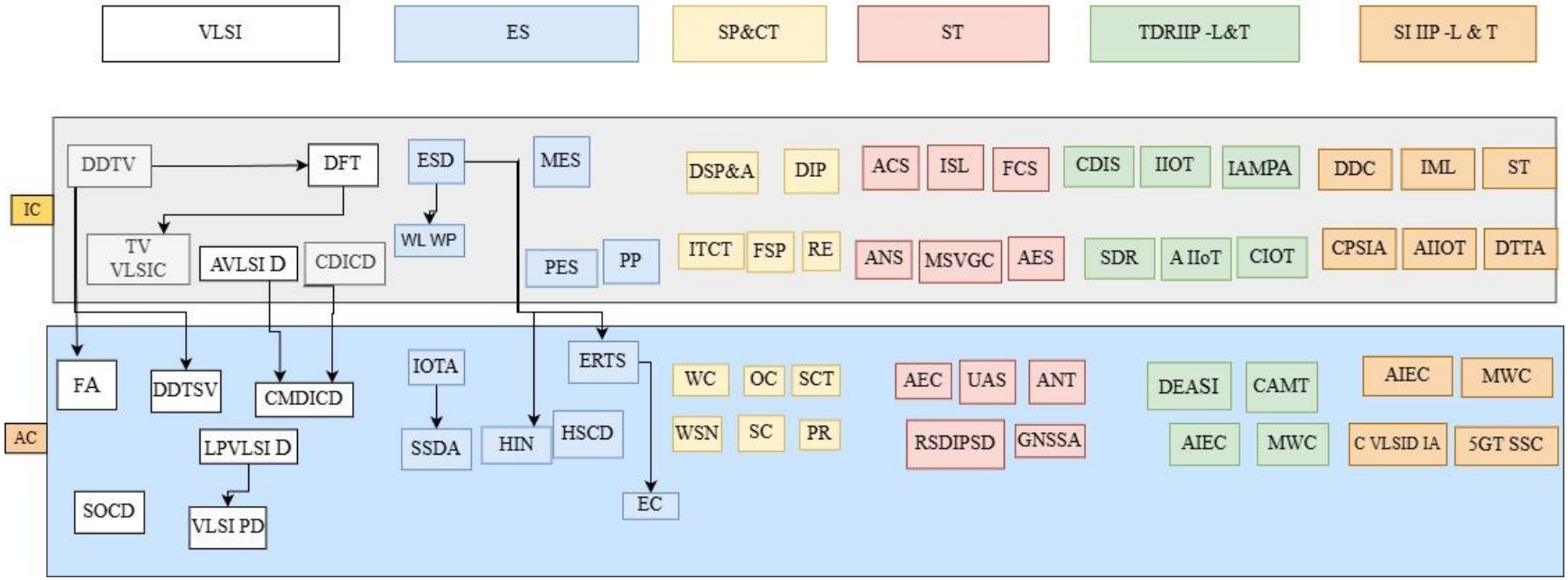

	INTERMEDIATE - LEVEL COURSES		ADVANCED COURSES	
VLSI	DDTV	Digital System Design Through Verilog	CMICD	CMOS Mixed Signal IC Design
	DFT	Design for Testability	LVLSI	Low Power VLSI Design
	CDICD	CMOS Digital IC Design	FA	FPGAs & ASIC Design
	TVVLSI	Testing & Verification of VLSI Circuits	SoCD	SoC design
	AVLSI	Analog VLSI Design	DDTSV	Digital System Design Through System Verilog
			VLSIPD	VLSI Physical System Design
Embedded Systems-ES	MES	Microcontrollers for Embedded Systems	ERTS	Embedded & Real Time Systems
	ESD	Embedded System Design	HSCD	Hardware & Software Codesign
	PES	Programming Languages for Embedded System	SSDAS	Smart Sensors & Devices for Agriculture
	WLWP	Wireless LAN's & PAN's	HIN	Hardware interfacing & Networking
	PP	Parallel Processing	EC	Embedded Computing
			IOTA	Internet of Things & its Applications.
Signal Processing and Communication Technology-ST&CT	FSP	Fundamentals of Speech Processing	SCT	Soft Computing Techniques
	ITCT	Information Theory & Coding Techniques	OC	Optical Communications
	DSPA	Digital Signal Processors & Architectures	SC	Satellite Communications
	RE	Radar Engineering	WC	Wireless Communications
	DIP	Digital Image Processing	WSN	Wireless Sensor Networks
			PR	Pattern Recognition
Space Technology-ST	ISL	Introduction to Space Laws	ANS	Avionics Technology
	ACS	Aircraft Communication Systems	GNSSA	Global Navigation Satellite Systems & Applications
	ANS	Aircraft Navigation Systems	UAS	Unmanned Aircraft System
	MSVGC	Missile & Space Vehicle Guidance and Control	AEC	Aerospace Electromagnetic Compatibility
	FCS	Flight Control System	RSDIPSD	Remote Sensing & Digital Image Processing of Satellite Data
Technology for Digital Resilience Industry Integrated Program- L & T-TDRIIP-L&T	AEC	Avionics Embedded System		
	CDIS	Cyber Defence & Information Security	DEASI	Data Engineering, Analytics & Security in Industries
	IAMPA	Industrial Applications of Microcontrollers - A Practice based approach	CAMT	Cloud Adoption & Management Techniques
	AIIoT	Applied Industrial IoT	AIEC	Artificial Intelligence & Edge Computing
	SDR	Software Defined Radio	IioT	Introduction to Internet of things

Smart Infrastructure (Electronics) Industry Integrated Program- L & T	CBIoT	Cloud Based IoT	MWC	Modern Wireless communication
	CPSIA	Cyber Physical Systems for Industrial Applications	5GTSSC	5G Technology for Smarter & Secure Connectivity
	DTTA	Drone Technology and its Transformative Applications -A Practitioner's Perspective	CVLSIIA	Chip based VLSI Design for Industrial Applications
	DDC	Digital Data Communication		
	IML	Introduction to Machine Learning		
	S&T	Sensors &Transducers		

Suggestive Semester-wise Curriculum

I SEMESTER

Course code	Course Title	Course						Total Hours
		Category	Level	L	T	P	C	
2501MA01	Linear Algebra & Calculus	MCC	FC	2	1		3	3
2501CH02	Applied Chemistry	MCC	FC	2		1	3	4
2501CS01 / 2601DS01	Programming for Problem Solving Using C* / Problem Solving Through C Programming#	MCC	FC	2		2	4	6
2501EE01	Basic Electrical & Electronics Engineering	MCC	FC	2		2	4	6
2501IT01/ 2601AI01	Business Intelligence Lab* / Business Intelligence & AI Tools Lab#	MCC	FC			2	2	4
2501EN01	Essential Cognitive Skills for Engineers	AEC	FC			1	1	2
2501UC08	Universal Human Values	AEC	FC	2			2	2
	Total			**10**	**1**	**8**	**19**	**27**

II SEMESTER

Course code	Course Title	Course						Total Hours
		Category	Level	L	T	P	C	
2501MA02	Differential Equations & Vector Calculus	MCC	FC	2	1		3	3
2501PH02	Modern Physics	MCC	FC	2		1	3	4
2501ME01	Engineering Graphics	MCC	FC	1		2	3	5
2501EC02	Network Analysis	MCC	FC	3	1		4	4
2501ME03	Engineering Workshop	MCC	FC			1	1	2
2501CS03/ 2601DS02	Data Structures* / Data Structures using C++#	MDC	FC	2		2	4	6
2501UC07	Design Thinking using AI	AEC	FC			1	1	2
2501EN02	Advanced Cognitive Skills for Engineers	AEC	FC			1	1	2
2501UC11	Employability Skills-I	VAC	FC			3	0	3
2501AC01	Environmental Science	MC	FC	2			0	2
2501EC21	PCB Design	SEC	FC			2	2	4
	Total			**12**	**2**	**13**	**22**	**37**

III SEMESTER

Course code	Course Title	Course						Total Hours
		Category	Level	L	T	P	C	
2501MA07	Transform Calculus	MCC	FC	2	1		3	3
2501EC15	Digital Electronics	MCC	FC	2		2	4	6
2501EC03	Electronic Devices & Circuits	MCC	FC	2		2	4	6
2501EC14	Signals & Systems	MCC	FC	2	1	1	4	5
2501CS02	Data Analysis Using Python	VAC	FC			2	2	2
2501CS10 / 2501CS92	Advanced Data Structures & Algorithm Analysis / Data Structures using C$	VAC	AC	2		1	3	4
2501UC13	Employability Skills-II	VAC	FC			3	0	3
2501AC02	Constitution of India	MC	FC	2			0	2
	Total			**12**	**2**	**11**	**20**	**31**

IV SEMESTER

Course code	Course Title	Course						Total Hours
		Category	Level	L	T	P	C	
2501EC04	Random Variables & Stochastic Processes	MCC	FC	3	1		4	4
2501EC06	Analog Electronics	MCC	IC	2		2	4	6
2501EC11	VLSI Design	MCC	IC	2		2	4	6
	Minor Stream Course-1or University Open Elective Course -1	MSC or UEC	FC	2		1	3	4
2501EC12	Microprocessors & Microcontrollers	MCC	AC	2		1	3	4
2501CS90	Object Oriented Programming through JAVA	SEC	AC			2	2	4
2510CS04	Internet of Things	SEC	FC			1	1	2
2501UC14	Employability Skills-III	VAC	IC			3	0	3
2501AC03	Research Methodology	MC	FC	2			0	2
	Total			**13**	**1**	**12**	**21**	**35**

V SEMESTER

Course code	Course Title	Course						Total Hours
		Category	Level	L	T	P	C	
2501EC05	Electromagnetic Waves & Transmission Lines	MCC	IC	2	1		3	3
2501EC09	Analog & Digital Communications	MCC	IC	2	1	1	4	5
2501EC07	Integrated Circuits & Applications	MCC	IC	2		2	4	6
2501EC08	Linear Control Systems	MCC	IC	2	1		3	3
	Minor Stream Course -2 or University Open Elective Course -2	MSC or UEC	IC	3			3	3
2501EC16	ECAD Tools	SEC	AC			2	2	4
2501UC15	Employability Skills-IV	VAC	IC			3	0	3
2501EC18	Summer Internship-I	SI	IC			2	2	4
2501AC04	Intellectual Property Rights & Patents	MC	FC	2			0	2
	Total			**13**	**3**	**10**	**21**	**34**

VI SEMESTER

Course code	Course Title	Course						Total Hours
		Category	Level	L	T	P	C	
2501EC10	Digital Signal Processing	MCC	IC	2		1	3	4
2501EC13	Antenna & Microwave Engineering	MCC	AC	2		2	4	6
2501MB01	Engineering Economics & Management	MDC	FC	2			2	2
	Minor Stream Course-3 or University Open Elective Course -3	MSC or UEC	IC	2		1	3	4
	Minor Stream Course -4 or University Open Elective Course -4	MSC or UEC	IC	2	1		3	3
	Minor Stream Course -5 or University Open Elective Course -5	MSC or UEC	AC	2	1		3	3
2501EC94	Soft Computing Tools	SEC	IC			2	2	4
2501AC05	Indian Knowledge Systems	MC	FC	2				2
	Total			**14**	**2**	**6**	**20**	**28**

VII SEMESTER

Course code	Course Title	Course						Total Hours
		Category	Level	L	T	P	C	
	Minor Stream Course -6 or University Open Elective Course -6	MSC (or) UEC	IC	2	1		3	3
	Minor Stream Course -7 or University Open Elective Course -7	MSC (or) UEC	IC	3			3	3
	Minor Stream Course -8 or University Open Elective Course -8	MSC (or) UEC	AC	2	1		3	3
	Minor Stream Courses -9 or University Open Elective Course -9	MSC (or) UEC	AC	3			3	3
	Minor Stream Course -10 or University Open Elective Course -10	MSC (or) UEC	AC	3			3	3
	Minor Stream Course -11 or University Open Elective Course -11	MSC (or) UEC	AC	2			2	2
2501EC17	Verification using Verilog & UVM	SEC	AC			2	2	4
2501EC19	Summer Internship-II	SI	IC			2	2	4
	Total			**15**	**2**	**4**	**21**	**25**

VIII SEMESTER

Course code	Course Title	Course						Total Hours
		Category	Level	L	T	P	C	
2501UC09	Technical Paper Publication	AEC	AC			2	2	4
2501UC16	Employability Skills-V	VAC	AC			3	1	3
2501EC96	Student Activity Based Learning	AEC	AC				2	2
2501EC20	Full Semester Internship	PROJ	AC			12	12	24
	Total					**17**	**17**	**33**

Total Credits: 161

Note: *Courses are applicable only to students admitted in the year 2025.
#Courses are applicable to the students admitted from the year 2026 onwards.
$ Courses are applicable to the Lateral Entry students.
All the other courses are applicable to students admitted from the year 2025 onwards.

Minor Degree in Electronics and Communication Engineering (Offered to other branches students):

Course Code	Course Name	Level	L	T	P	C	CIE	SEE	Total	Pre-Requisite
2501EC87	Fundamentals of Communications	FC	2		1	3	50	50	100	-
2501EC88	Fundamentals of Signal Processing	FC	2		1	3	50	50	100	-
2501EC89	Analog & Digital Circuits	IC	2			2	50	50	100	BEEE
2501EC42	Wireless LAN's & PAN's	IC	2	1		3	50	50	100	-
2501EC90	Linear & Digital IC Applications (or) Sensors & Actuators	IC	3			3	50	50	100	ADC
2501EC91										
2501EC92	Embedded Microcontrollers (or) Digital System Design	IC	2		1	3	50	50	100	ADC, PPSC
2501EC93										
2501EC67	Introduction to Internet of things (or) Modern Wireless Communications	AC	2		1	3	50	50	100	EM, WLAN's & PAN's
2501EC74			3			3	50	50	100	FC
Total			**15**	**1**	**4**	**20**				

Minor Degree in Civil Engineering

Course Code	Course Name	Level	L	T	P	C	CIE	SEE	Total	Pre-requisite
2501CE25	Repair & Rehabilitation of Structures	FC	3			3	50	50	100	-
2501CE43	Building Planning & Computer-Aided Drawing	FC			2	2	50	50	100	-
2501CE27	Green Buildings	FC	3			3	50	50	100	-
2501CE40	Fundamentals of Soil Behaviour	FC	2	1		3	50	50	100	-
2501CE54 2501CE47	Railway Engineering(or) Docks & Harbour Engineering	FC	3			3	50	50	100	-
2501CE36 2501CE37	Environmental Impact & Risk Management(or) Environmental Management	IC	3			3	50	50	100	-
2501CE56 2501CE49	Urban Transportation Planning(or) Intelligent Transportation Systems	IC	3			3	50	50	100	-
Total			**17**	**1**	**2**	**20**				

Minor Degree in Electrical and Electronics Engineering

Course Code	Course Name	Level	L	T	P	C	CIE	SEE	Total	Pre-requisite
2501EE55	Operation &Control of Electric machines	FC	2			2	50	50	100	BEEE
2501EE56	Fundamentals of Power Electronics	FC	2			2	50	50	100	BEEE
2501EE13	Electrical Measurements & Instrumentation	FC	2	1	1	4	50	50	100	ENA-1/BEEE
2501EE53	Electric Power Generation, Transmission and Distribution Systems	IC	3			3	50	50	100	ENA-1/BEEE
2501EE34 2501EE27	Alternative Energy Sources (or) Utilization of Electrical Energy	IC	3			3	50	50	100	EPGDS / BEEE/ ISM
2501EE37 2501EE35	Hybrid Electric Vehicles (or) Special Electric machines	AC	3			3	50	50	100	FPE/ OCEM
2501EE43 2501EE30	Electrical Safety (or) Methods &Algorithms for Intelligent Control	AC	3			3	50	50	100	EPGDS /PSA
	Total		**18**	**1**	**1**	**20**				

Minor Degree in Mechanical Engineering

Course Code	Course Name	Level	L	T	P	C	CIE	SEE	Total	Pre-requisite
2501ME74	Basic Mechanical Engineering	FC	2			2	50	50	100	-
2501ME04	Engineering Thermodynamics	IC	2	1		3	50	50	100	SSP/ MP
2501ME77	Introduction to Automobile Engineering (or)	IC	3			3	50	50	100	SSP/ MP
2501ME78	Mechanics of Solids									
2501ME12	Heat Power Engineering (or)	IC	2	1		3	50	50	100	ETD
2501ME40	Refrigeration & Air Conditioning									
2501ME75	Production Technology	IC	3			3	50	50	100	EW
2501ME76	Metallurgy & Material Science	IC	3			3	50	50	100	SSP/ MP
2501ME79	Theory of Machines (or)	AC	3			3	50	50	100	SSP/ MP
2501ME80	Advanced Engineering Metrology									
	Total		**18**	**2**		**20**				

Minor Degree in Computer Science and Engineering

Course Code	Course Title	Level	L	T	P	C	CIE	SEE	Total	Pre-requisite
2501CS13	Operating Systems	IC	2		1	3	50	50	100	-
2501CS07	Computer Networks	IC	3			3	50	50	100	-
2501IT07	Agile Software Engineering	IC	2		1	3	50	50	100	PPSC
2501AI03	Data Mining	IC	2		1	3	50	50	100	-
2501CS08	Object Oriented Programming through C++ (or) Java Programming	IC	2		2	4	50	50	100	PPSC
2501IT06										
2501CS16	Introduction to MERN Stack Development(or) Information Security Analysis & Audit	IC			2	2	50	50	100	JP
2501CS30		IC	2			2	50	50	100	-
2501CS18	Advanced MERN Stack Development(or) Flutter Fundamentals	AC			2	2	50	50	100	IMSD
2501IT12		AC			2	2	50	50	100	-
Total			**13**		**7**	**20**				

Minor Degree in Data Science

Course Code	Course Name	Level	L	T	P	C	CIE	SEE	Total	Pre-requisite
2501IT07	Agile Software Engineering	IC	2		1	3	50	50	100	PPSC
2501CS34	Fundamentals of Data Science	IC	2		1	3	50	50	100	PPSC
2501CS12	NoSQL Databases	IC	2			2	50	50	100	-
2501AI03	Data Mining	IC	2		1	3	50	50	100	-
2501CS37 2501CS36	Health Care Data Analytics (or) Business Intelligence & Analytics	IC	2		1	3	50	50	100	PPSC
2501AI04 2501AI48	Big Data Analytics (or) Data Visualization Techniques	AC	2		1	3	50	50	100	DM DAP
2501CS41 2501CS40	Social Network Analysis (or) Social Networks & Semantic Web	AC	2		1	3	50	50	100	-
	Total		**14**		**6**	**20**				

Minor Degree in Artificial Intelligence and Machine Learning

Course Code	Course Name	Level	L	T	P	C	CIE	SEE	Total	Pre-requisite
2501AI02	Artificial Intelligence	IC	2		1	3	50	50	100	DAP
2501AI05	Machine Learning	IC	2		2	4	50	50	100	DAP
2501AI15	AI Chatbots	IC	2			2	50	50	100	DAP
2501AI14	Soft Computing (or) Fundamentals of Data Science	IC	2		1	3	50	50	100	AI
2501CS34			2		1	3	50	50	100	PPSC
2501AI47	Natural Language Processing and Text Analytics (or) Data Visualization Techniques	AC	2		1	3	50	50	100	DAP
2501AI48										
2501AI16	Prompt Engineering and GenAI (or) Social Network Analysis	AC	2		1	3	50	50	100	ML
2501CS41										
2501AI17	Federated Machine Learning	AC	2			2	50	50	100	ML
TOTAL			**14**		**6**	**20**				

Minor Degree in Petroleum Technology

Course Code	Course Name	Level	L	T	P	C	CIE	SEE	Total	Pre-requisite
2501PT27	Introduction to Petroleum Engineering	FC	3			3	50	50	100	-
2501PT35	Unit Operations in Petroleum Industry	FC	3			3	50	50	100	-
2501PT47	Fundamentals of Geology & Reservoir Engineering	IC	3			3	50	50	100	-
2501PT48	Fundamentals of Drilling & Production Engineering (or) Unconventional Hydrocarbon Resources	IC	3			3	50	50	100	-
2501PT16			1	1		2				
2501PT49	Natural Gas Hydrates (or) Fundamentals of Liquefied Natural Gas	AC	2			2	50	50	100	-
2501PT05			3			3				
2501PT50	Artificial Lift Techniques (or) Enhanced Oil Recovery	AC	3			3	50	50	100	-
2501PT03			2	1		3				
2501PT12	Petroleum Refinery Engineering	AC	3			3	50	50	100	-
Total			**18**	**2**		**20**				

Minor Degree in Mining Engineering

Course Code	Course Name	Level	L	T	P	C	CIE	SEE	Total	Pre-requisite
2501MN003	Development of Mineral Deposits	FC	3			3	50	50	100	-
2501MN41	Green Mining	FC	3			3	50	50	100	-
2501MN06	Surface Mining	IC	3			3	50	50	100	DMD
2501MN24	Drilling & Blasting	IC	3			3	50	50	100	DMD
2501MN07 2501MN08	Underground Coal Mining Technology (or) Underground Metal Mining Technology	IC	3			3	50	50	100	DMD
2501MN14 2501MN28	Mine Legislation & General Safety (or) Environmental Pollution & Control	AC	3			3	50	50	100	UCMT / UMMT
2501MN45 2501MN46	Industrial Safety Practices (or) Ground Control	AC	2			2	50	50	100	-
Total			**20**			**20**				

Minor Degree in Agricultural Engineering

Agricultural Engineering							Marks			Pre-requisite
Course Code	**Course Name**	**Level**	**L**	**T**	**P**	**C**	**CIE**	**SEE**	**Total**	
2501AE82	Fundamentals of Renewable Energy Sources	FC	3			3	50	50	100	-
2501AE83	Post-harvest Engineering of Cereal Crops	FC	3			3	50	50	100	-
2501AE84	Ground Water Hydrology	FC	3			3	50	50	100	-
2501AE85	Micro Irrigation Systems	IC	2			2	50	50	100	-
2501AE86 2501AE87	Surface Water Hydrology (OR) Land & Water Management Engineering	IC	3			3	50	50	100	GWH
2501AE88 2501AE89	Agricultural Process Engineering & Food Quality (OR) Post-harvest Engine for Horticultural Pro	AC	3			3	50	50	100	PHECC
2501AE90 2501AE91	Agricultural &Machinery Equipment (or) Design of Bio-energy systems	AC	3	0	0	3	50	50	100	FRES
	Total		**20**			**20**				

Minor Degree in Entrepreneurship Development & Incubation

Course Code	Course Name	Level	L	T	P	C	CIE	SEE	Total	Pre-requisite
2501MB07	New Product Development	FC	3			3	50	50	100	-
2501MB08	Entrepreneurship & Small Business Management	IC	2			2	50	50	100	-
2501MB09	Insurance & Risk Management	IC	3			3	50	50	100	-
2501MB10	Change & Innovations Management	IC	3			3	50	50	100	-
2501MB11 2501MB12	Personal Financial Planning (or) E-Business management	IC	3			3	50	50	100	-
2501MB13 2501MB14	Business Policy & Strategic Management (or) Green Marketing	AC	3			3	50	50	100	-
2501MB15 2501MB16	Startup Management (or) Venture Management	AC	3			3	50	50	100	-
Total			**20**			**20**				

Minor Degree in Quantum Technologies

S.No.	Course Code	Course Name	L	T	P	C	Semester
Mandatory Courses							
1	251EC097	Survey of Quantum technologies and Application	3	0	0	3	IV
2	251EC098	Foundations of Quantum Technologies	3	0	0	3	V
3	251EC099	Basic Programming Lab (or)	1	0	2	3	V
	251EC100	Basic Laboratory Course for Quantum Technologies					
4	251EC101	Quantum Algorithms and Cryptography	12 week 3 Credit - NPTEL MOOC			3	VII/VIII
Any One course from the below							
5	251EC102	Introduction to Quantum Computation	3	0	0	3	VI
6	251EC103	Introduction to Quantum Communication	3	0	0	3	VI
7	251EC104	Introduction to Quantum Sensing	3	0	0	3	VI
8	251EC105	Introduction to Quantum Materials	3	0	0	3	VI
Any One course from the below							
9	251EC106	Engineering Foundations of Quantum Technologies	3	0	0	3	VII
10	251EC107	Solid State Physics for Quantum Technologies	3	0	0	3	VII
11	251EC108	Quantum Optics	3	0	0	3	VII
12	251EC109	Quantum Cybersecurity	3	0	0	3	VII
13	251EC110	Quantum Machine Learning	3	0	0	3	VII
Total			**18**	**0**	**0**	**18**	

Minor Degree
Pre-requisite Flow Chart

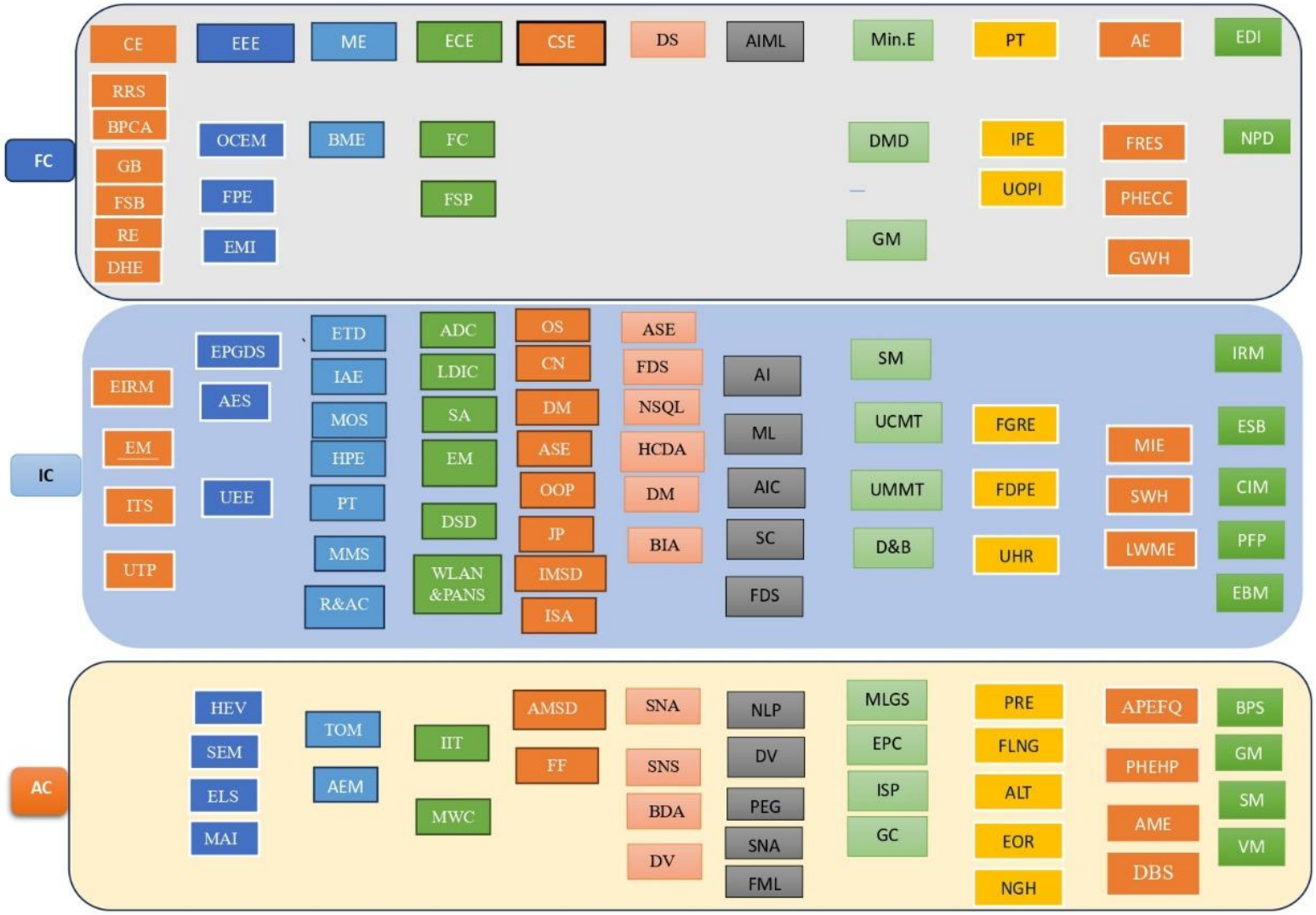

Dept.	FOUNDATION COURSE		INTERMEDIATE- LEVEL COURSE		ADVANCED COURSE	
CE	RRS	Repair &Rehabilitation of Structures	EIRM	Environmental Impact & Risk Management		
	BPCA	Building Planning & Computer-Aided Drawing	EM	Environmental Management		
	GB	Green Building	UTP	Urban Transportation Planning		
	FSB	Fundamental of Soil Behaviour	ITS	Intelligent Transportation Systems		
	RE	Railway Engineering				
	DHE	Docks &Harbour Engineering				
EEE	OCEM	Operation control of Electric Machines	AES	Alternative Energy Sources	MAI	Methods & Algorithms for Intelligent Control
	FPE	Fundamentals of Power Electronics	EPGDS	Electric Power Generation &Distribution Systems	HEV	Hybrid Electric Vehicles
	EMI	Electrical Measurements & Instrumentation	UEE	Utilization of Electrical Energy	SEM	Special Electric Machines
					ELS	Electrical Safety
ME	BME	Basic Mechanical Engineering	ETD	Engineering Thermodynamics	TOM	Theory of Machines
			IAE	Introduction to Automobile Engineering	AEM	Advanced Engineering Metrology
			MOS	Mechanics of Solids		
			HPE	Heat Power Engineering		
			PT	Production Technology		
			MMS	Metallurgy & Material Science		
			R&AC	Refrigeration &Air Conditioning		
ECE	FC	Fundamentals of Communications	ADC	Analog & Digital Circuits	IIT	Introduction to Internet of things
			LDIC	Linear & Digital IC Applications		
			SA	Sensors & Actuators		
	FSP	Fundamentals of Signal Processing	EM	Embedded Microcontrollers	MWC	Modern Wireless Communications
			DSD	Digital System Design		
			WLAN &PAN	Wireless LANS & PANS		
CSE			SE	Software Engineering		
			OOP	Object Oriented Programming through C++	AMSD	Advanced MERN Stack Development
			OS	Operating Systems	FF	Flutter Fundamentals
			CN	Computer Networks		
			JP	Java Programming		
			IMSD	Introduction to MERN Stack Development		
			ISA	Information Security Analysis and Audit		
			DM	Data Mining		
DS			DM	Data Mining	SNA	Social Network Analysis
			FDS	Fundamentals of Data Science	DV	Data Visualization Techniques
			SE	Software Engineering	BDA	Big Data Analytics

			NSQL	NoSQL Databases	SNSW	Social Networks and Semantic Web
			BIA	Business Intelligence & Analytics		
			HCDA	Health Care Data Analysis		
			ML	Machine Learning	DV	Data Visualization Techniques
			AI	Artificial Intelligence	PEG	Prompt Engineering and GenAI
AIML			AI C	AI Chatbot	SNA	Social Network Analysis
			FDS	Fundamentals of Data Science	FML	Federated Machine Learning
			SC	Soft Computing	NLP	Natural Language Processing and Text Analytics
	DMD	Development of Mineral Deposits	SM	Surface Mining	MLGS	Mine Legislation and General Safety
Min.E	GM	Green Mining	UCMT	Underground Coal Mining Technology	EPC	Environmental Pollution & Control
			UMMT	Underground Metal Mining Technology	ISP	Industrial Safety Practices
			DB	Drilling & Blasting	GC	Ground Control
	IPE	Introduction to Petroleum Engineering	FGRE	Fundamentals of Geology and Reservoir Engineering	PRE	Petroleum Refinery Engineering
PT	UOPI	Unit operations in Petroleum Industry	FDPE	Fundamentals of Drilling and Production Engineering	FLNG	Fundamentals of Liquefied Natural Gas
			UHR	Unconventional Hydrocarbon Resources	NGH	Natural Gas Hydrates
					ALT	Artificial Lift Techniques
					EOR	Enhanced Oil Recovery
	GWH	Ground Water Hydrology	LWME	Land and Water Management	DBS	Design of Bio-Energy Systems
	PHECC	Post-harvest Engineering of Cereal Crops	SWH	Surface Water Hydrology	PHEHP	Post-Harvest Engineering for Horticultural Produce
Ag.E			MIE	Micro Irrigation Systems	AME	Agricultural Machinery and Equipment
	FRES	Fundamentals of Renewable Energy Sources			APEFQ	Agriculture Process Engineering and Food Quality
	NPD	New Product Development	ESB	Entrepreneurship and Small Business Management	BPS	Business Policy & Strategic Management
EDC			CIM	Change & Innovations Management	GM	Green Marketing
			PFP	Personal Financial Planning	SM	Startup Management
			EBM	E-Business Management	VM	Venture Management
			IRM	Insurance and Risk Management		

Major Core Courses (MCC)

Course Code	Course Name	Level	L	T	P	C	CIE	SEE	Total	Pre-requisite
2501MA01	Linear Algebra & Calculus	FC	2	1		3	50	50	100	-
2501MA02	Differential Equations & Vector Calculus	FC	2	1		3	50	50	100	-
2501MA07	Transform Calculus	FC	2	1		3	50	50	100	LAC, DEVC
2501CH02	Applied Chemistry	FC	2		1	3	50	50	100	-
2501PH02	Modern Physics	FC	2		1	3	50	50	100	-
2501CS01 / 2601DS01	Programming for Problem Solving Using C* / Problem Solving Through C Programming#	FC	2		2	4	50	50	100	-
2501IT01/ 2601AI01	Business Intelligence Lab* / Business Intelligence & AI Tools Lab#	FC			2	2	50	50	100	-
2501ME01	Engineering Graphics	FC	1		2	3	50	50	100	-
2501ME03	Engineering Workshop	FC			1	1	100	-	100	-
2501EE01	Basic Electrical & Electronics Engineering	FC	2		2	4	50	50	100	-
2501EC02	Network Analysis	FC	3	1		4	50	50	100	-
2501EC15	Digital Electronics	FC	2		2	4	50	50	100	-
2501EC03	Electronic Devices & Circuits	FC	2		2	4	50	50	100	BEEE
2501EC04	Random Variables & Stochastic Processes	FC	3	1		4	50	50	100	-

2501EC14	Signals & Systems	FC	2	1	1	4	50	50	100	-
2501EC05	Electromagnetic Waves & Transmission Lines	IC	2	1		3	50	50	100	DEVC
2501EC06	Analog Electronics	IC	2		2	4	50	50	100	EDC
2501EC07	Integrated Circuits & Applications	IC	2		2	4	50	50	100	EDC
2501EC08	Linear Control Systems	IC	2	1		3	50	50	100	S&S
2501EC09	Analog & Digital Communications	IC	2	1	1	4	50	50	100	S&S
2501EC10	Digital Signal Processing	IC	2		1	3	50	50	100	S&S
2501EC11	VLSI Design	IC	2		2	4	50	50	100	EDC
2501EC12	Microprocessors & Microcontrollers	AC	2		1	3	50	50	100	DE
2501EC13	Antenna &Microwave Engineering	AC	2		2	4	50	50	100	EMTL
Total			**45**	**7**	**29**	**81**				

Linear Algebra & Calculus

(Common to CE, EEE, ME, ECE, CSE, IT, AIML, CSE(DS), PT & Min.E)

	L	T	P	C
Course Code: 2501MA01	**2**	**1**	**0**	**3**

Course Outcomes:

At the end of the Course, Student will be able to:

CO1: Solve the system of Linear equations.
CO2: Calculate Eigen values and Eigen vectors.
CO3: Apply differential calculus for one and several variable functions.
CO4: Calculate the Maximum value and Minimum value of a function of several variables.
CO5: Compute areas and volumes using multiple integrals.

Mapping of Course Outcomes with Program Outcomes:

CO/PO	PO 1	PO 2	PO 3	PO 4	PO 5	PO 6	PO 7	PO 8	PO 9	PO 10	PO 11
CO1	3	2	-	-	-	-	-	-	-	-	-
CO2	3	2	-	-	-	-	-	-	-	-	-
CO3	3	2	-	-	-	-	-	-	-	-	-
CO4	3	2	-	-	-	-	-	-	-	-	-
CO5	3	2	-	-	-	-	-	-	-	-	-

UNIT – I

System of linear Equations: Vector Space,Linear Independence,Rank of a matrix by echelon form, normal form, Inverse of Non-singular matrices by Gauss-Jordan method, Solutions of Linear Systems: Existence, Uniqueness,Solving the system by Gauss elimination method.

Practice(Using any computational tool)

1. Variables, arithmetic operations, elementary mathematical functions.
2. Defining row vector, column vector, Arithmetic operations on matrices
3. finding transpose of a matrix, inverse of a matrix, determinant of a matrix
4. rank of a matrix, , solving system of linear equations.

UNIT – II

Eigenvalues, Eigenvectors : Eigenvalues and properties(without proof), Eigenvectors, Diagonalization of a matrix, Cayley-Hamilton Theorem (without proof), Quadratic forms, Reduction of Quadratic form to canonical forms by Orthogonal Transformation,Nature of Quadratic forms.

Practice(Using any computational tool): Computing eigen values and eigen vectors, matrix diagonalization

UNIT – III

One Variable Calculus:Cauchy's mean value theorem, Taylor's and Maclaurin theorems with remainders (without proof), Problems and applications on the above theorems.

Several Variable Calculus: Limit, Continuity, partial derivatives and their geometrical interpretation.

Practice(Using any computational tool): Basics of plotting,Plot graphs of single variable functions.

UNIT – IV

Functions of several variables: Total differential and differentiability, derivatives of composite and implicit functions, derivatives of higher order and their commutativity,Euler's theorem on homogeneous functions, Taylor's and Maclaurin's expansion of functions of two variables. Jacobians, maxima and minima, constrained maxima/minima problems using Lagrange's method of multipliers.

Practice(Using any computational tool): Plot graphs of various multi variable functions

UNIT – V

Multiple Integrals: Double integrals, triple integrals, change of order of integration, change of variables to polar, cylindrical and spherical coordinates. Finding areas (by double integrals) and volumes (by double integrals and triple integrals).

Practice(Using any computational tool): Plotting the region of Integration

Students are advised to use any computational / AI Tool like Wolfrum Alpha, Symbolab, Mathway, Desmos, Geogebra etc., for the practice

Text Books:

1. Advanced Engineering Mathematics, R. K. Jain and S. R. K. Iyengar, Alpha Science International Ltd., 5thEdition (9th reprint), 2021, ISBN:978-8184875607.
2. Advanced Modern Engineering Mathematics, Glyn James, Pearson publishers, 5th Edition, 2018, ISBN: 978-1292174341.

Reference Books:

1. Advanced Engineering Mathematics, Michael Greenberg, , Pearson publishers, 9thEdition, ISBN: 9788177585469.
2. Higher Engineering Mathematics, H. K Das, Er. Rajnish Verma, S. Chand Publications, Third Edition, 2023, ISBN: 9788121938907.

Web Links:

1. https://archive.nptel.ac.in/courses/111/104/111104137/
2. https://archive.nptel.ac.in/courses/111/107/111107108/
3. https://www.khanacademy.org/math/linear-algebra/
4. https://www.khanacademy.org/math/multivariable-calculus

Differential Equations & Vector Calculus
(Common to CE, EEE, ME, ECE, CSE, IT, AIML, CSE(DS), PT & Min.E)

	L	T	P	C
Course Code:2501MA02	**2**	**1**	**0**	**3**

Course Outcomes:

At the end of the Course, Student will be able to:

CO1: Solve the linear differential equations of first order and apply in various engineering problems.
CO2: Solve the linear differential equations of higher order and apply in various engineering problems.
CO3: Solve the linear partial differential equations
CO4: Calculate the gradient, divergence and curl.
CO5: Compute work done, flux using vector integration

Mapping of Course Outcomes with Program Outcomes:

CO/PO	PO 1	PO 2	PO 3	PO 4	PO 5	PO 6	PO 7	PO 8	PO 9	PO 10	PO 11
CO1	3	2	-	-	-	-	-	-	-	-	-
CO2	3	2	-	-	-	-	-	-	-	-	-
CO3	3	2	-	-	-	-	-	-	-	-	-
CO4	3	2	-	-	-	-	-	-	-	-	-
CO5	3	2	-	-	-	-	-	-	-	-	-

UNIT – I
Ordinary Differential Equations of First Order and First Degree:
Solution of first order linear differential equations, exact differential equations and equations reducible to exact differential equations, Orthogonal Trajectories, Modelling of RL- circuit.
Practice(Using any computational tool): Solving the first order initial value problems using **odesolver** and plot the solution curves.

UNIT – II
Linear Differential Equations of Higher Order:
Solution of linear differential equations with constant coefficients, method of variation of parameters, solution of simultaneous linear differential equations.
Equations reducible to Linear differential equations with constant coefficients: Cauchy's homogeneous Linear Equations, Legendre's Linear Equations. Study of oscillations arising in LCR circuit (free oscillations and forced oscillations).
Practice(Using any computational tool): Solving the second order initial value problems using **odesolver** and plot the solution curves

UNIT – III

Partial Differential Equations:

Solution of linear PDE of first order by Lagrange's method, solution of homogeneous linear PDE of higher order with constant coefficients.

UNIT – IV

Vector Differentiation:

Gradient of a scalar field, finding angle between two surfaces, directional derivative. Divergence and solenoidal fields. Curl and irrotational fields, Finding Scalar Potential.

Practice(Using any computational tool): Plotting of surfaces, 3D-plots, plotting vector fields

UNIT – V

Vector Integration:

Line integrals, work done by a force, conservative force field, surface integral, flux, volume integral. Green's theorem, Stoke's theorem and Gauss divergence theorem.

Students are advised to use any computational / AI Tool like Wolfrum Alpha, Symbolab, Mathway, Desmos, Geogebra etc., for the practice

Text Books:

1. Advanced Engineering Mathematics, E. Kreyszig, John Willey & Sons,10thEdition, 2018,ISBN978-0470458365.
2. Higher Engineering Mathematics, B. S. Grewal, Khanna Publishers, 44thEdition 2021,ISBN 978-9383214204.

Reference Books:

1. Advanced Engineering Mathematics, Dennis G. Zill, Jones & Bartlett Learning, 2018, 6th Edition.ISBN978-1284105902.
2. Higher Engineering Mathematics, B.V. Ramana, McGraw-Hill Education, 11thEdition, ISBN 978-9339216016.

Web Links:

1. https://www.classcentral.com/course/differential-equations-engineers-13258
2. https://archive.nptel.ac.in/courses/111/106/111106100/
3. https://www.khanacademy.org/math/differential-equations
4. https://archive.nptel.ac.in/courses/111/101/111101153/
5. https://archive.nptel.ac.in/courses/111/105/111105122/

Transform Calculus

	L	T	P	C
Course Code: 2501MA07	**2**	**1**	**0**	**3**

Course Outcomes:

At the end of the Course, Student will be able to:

CO1: Calculate the Fourier series of a given function and examine the convergence of the series.
CO2: Calculate Laplace transform of standard functions and examine the properties of Laplace transform.
CO3: Apply Laplace transform to solve Initial value problems.
CO4: Calculate the Fourier transform for certain functions.
CO5: Compute Z- transform of various functionsand apply to solve difference equations.

Mapping of Course Outcomes with Program Outcomes:

CO/PO	PO 1	PO 2	PO 3	PO 4	PO 5	PO 6	PO 7	PO 8	PO 9	PO 10	PO 11
CO1	3	2	-	-	-	-	-	-	-	-	-
CO2	3	2	-	-	-	-	-	-	-	-	-
CO3	3	2	-	-	-	-	-	-	-	-	-
CO4	3	2	-	-	-	-	-	-	-	-	-
CO5	3	2	-	-	-	-	-	-	-	-	-

UNIT – I

Fourier Series: Fourier series of periodic function, Half-range series, Change of interval and Fourier series in complex form, Parseval's formula and R.M.S Value.

Practice(Using any computational tool): Generating Fourier Series of functions .

UNIT – II

Laplace Transforms: Laplace transforms of standard functions, Shifting theorems, Change of scale property, Multiplication with t, Division by t, Transforms of derivatives and integrals, Unit step function, Dirac delta function, Periodic function, Evaluating improper integralsof the type $\int_0^\infty f(t)\,dt$ using Laplace Transforms.

Practice(Using any computational tool): Find Laplace transform of elementary functions.

UNIT – III

Inverse Laplace Transforms : Inverse Laplace transforms of functions, First shifting theorem, Convolution theorem (without proof), Method of partial fractions, Second shifting theorem, Solving initial value problems and integro-differential equations using Laplace transforms.

UNIT – IV

Fourier Transforms: Fourier integral theorem (without proof), Fourier sine and cosine integral, Fourier Transform, Properties, Fourier sine and cosine transforms and Finite Fourier transforms.

UNIT – V

Z-Transforms: Definition of Z-transform, Properties, Damping rule, Shifting rule, Initial and final value theorems, Inverse Z-transform, Convolution theorem (without proof), Solution of Difference equation by using Z-transforms.

Students are advised to use any computational / AI Tool like Wolfrum Alpha, Symbolab, Mathway, Desmos, Geogebra etc., for the practice

Text Books:

1. Advanced Engineering Mathematics, R. K. Jain and S. R. K. Iyengar, Alpha Science International Ltd., 5th Edition (9th reprint), 2021· ISBN978-8184875607.
2. Higher Engineering Mathematics, B. S. Grewal, Khanna Publishers, 44'th Edition (2021).ISBN 978-9383214204.

Reference Books:

1. A text book of Engineering Mathematics, N.P. Bali and Manish Goyal, Laxmi Publications, Reprint, 2016.ISBN 978-8131808320.
2. Higher Engineering Mathematics, H. K. Dass, Er. R. Verma, S-Chand publishers, 3rd edition 2023.ISBN 9788121938907.

Web Links:

1. https://nptel.ac.in/courses/117105134/13
2. https://nptel.ac.in/courses/108106075/23
3. https://tutorial.math.lamar.edu/Classes/DE/LaplaceTransforms.aspx
4. https://archive.nptel.ac.in/courses/111/106/111106111/

Applied Chemistry

(Common to EEE, ECE, CSE, IT, CSE(DS) &AIML)

	L	T	P	C
Course Code: 2501CH02	**2**	**0**	**1**	**3**

Course Outcomes:

At the end of the course, the students will be able to:

CO1: Interpret the essence of polymers and explore engineering applications.
CO2: Exemplify the principles and applications of electrochemical cells.
CO3: Summarize the preliminaries of Computational Chemistry and its applications.
CO4: Infer the preliminaries of Nano, smart materials and their applications.
CO5: Apply the knowledge of water treatment and E-waste management.

Mapping of Course Outcomes with Program Outcomes:

CO/PO	PO1	PO2	PO3	PO4	PO5	PO6	PO7	PO8	PO9	PO10	PO11
CO1	3	-	1	-	-	1	-	1	1	-	-
CO2	3	-	-	-	-	-	-	1	1	-	-
CO3	2	-	-	-	-	-	-	1	1	-	-
CO4	2	-	-	-	-	1	-	1	1	-	-
CO5	3	-	-	-	-	2	-	1	1	-	-

UNIT-I

Polymer Chemistry:
Introduction to polymers, functionality of monomers, chain growth and step growth polymerization, coordination polymerization, with specific examples and methods of polymerization (Suspension polymerization and Emulsion Polymerization) Difference between thermoplastics and thermosetting plastics; Engineering application of plastics - PTFE and Bakelite.
Polymer composites: Composites as structural material; Synthesis and applications of Kevlar and Carbon Fibers.
Conducting polymers: Polyacetylene- Mechanism of conduction – applications (polymers in sensors, Self-Cleaning windows), Biodegradable polymers - Introduction, Polyglycolic acid - synthesis, degradation and uses.
Practice:

1. Preparation of a polymer (Bakelite).
2. Determination of molecular weight of polymer using Ostwald's viscometer.

UNIT- II

Electrochemistry and Applications:
Electrochemical cell, Nernst equation, cell potential calculations and numerical problems,

Electrochemical sensors: potentiometric sensors with examples, amperometry sensors with examples.

Primary cells – Zinc-air battery, Secondary cells –Ni-Cd and, Lead-Acid battery, lithium-ion batteries- working of the batteries including cell reactions; Fuel cells, hydrogen-oxygen, Methanol-Oxygen fuel cell– working of the cells. Polymer Electrolyte Membrane Fuel cells (PEMFC)

Electrochemical sensors – potentiometric sensors with examples, amperometric sensors with example (Glucose Electrochemical sensor)

Practice:

1. Conduct ometric titration of strong acid vs strong base.
2. Potentiometric titration of red-ox.
3. P^H-metric titration of Acid-Base.
4. Determination of Glucose by Electrochemical Sensor.

UNIT- III

Computational Chemistry

Computational Quantum Chemistry and its applications, Prediction of Molecular Properties using Computational Chemistry, Molecular Modelling and Structure - molecular Modelling today: overview of problems, tools, and solution analysis. Techniques for Conformational Sampling-Monte Carlo, global Optimization etc.

Practice:

1. Molecular docking to predict the interaction energy between molecules.

UNIT-IV

Nano and Smart Materials

Introduction to nano materials and general applications, basic chemical methods of preparation (top down and bottom up approach) - Sol-gel method. Applications of Carbon nano tubes and Fullerenes, Graphene (water treatment and drug delivery) Characterisation of nano materials by SEM and TEM (only Principle). Smart materials and their engineering applications, Shape memory materials- Poly L-Lactic acid, Thermo response materials – Poly acryl amides, Poly vinyl Amides.

Practice:

1. Preparation of nano particles by Green synthesis.
2. Characterization of nanoparticles (SEM & TEM).

UNIT- V

Water Treatment & E-Waste Management: Water treatment: Introduction, hardness of water, types, determination of hardness by EDTA method, disadvantages of hard water, removal of hardness by Zeolite and ion exchange method, Desalination of water – reverse osmosis and Electrodialysis.

E-Waste: Introduction, sources of e-waste, Composition, Characteristics, and Need of e-waste management. Toxic materials used in manufacturing electronic and electrical products; Recycling: Recycling of Li-Ion batteries. Extraction of copper from E-waste.

Practice:

1. Determination of Hardness of a ground water sample.
2. Determination of Chloride content in given water sample.
3. Estimation of dissolved oxygen in given water sample.

Text Books:

1. Engineering Chemistry, Prasanta Rath, S. Aruna Kumari, CENGAGE Learning, ISBN 978-93-5350-651-3, ISBN 93-5350-651-4.
2. Engineering Chemistry Fundamentals and Applications, Shikha Agarwal, Cambridge, 2nd Edition, ISBN 978-1-108-72444-9.

Reference Books:

1. Engineering Chemistry, Uppal M.M, Jain and Jain, Khanna Publishers, 35th Edition.
2. A Textbook of Engineering Chemistry, Dr.S.S.Dara, Dr.S.S.Umare, S.Chand Publication, 2022, ISBN 978-817-409-2625.
3. Molecular Modelling Principles and applications, Andrew R. Leach, Prentice Hall, II Edition, ISBN 978-935-501-2585.

Web Links:

1. https://archive.nptel.ac.in/courses/104/106/104106096/
2. https://archive.nptel.ac.in/courses/104/105/104105124/
3. https://archive.nptel.ac.in/courses/104/106/104106137/
4. https://nptel.ac.in/courses/118102003

Modern Physics
(Common to EEE, ECE, CSE, IT, AIML & CSE (DS))

	L	T	P	C
Course Code:2501PH02	**2**	**0**	**1**	**3**

Course Outcomes:
At the end of the Course, Student will be able to:

CO1: Apply the principles of interference and diffraction to design and enhance the resolving power of grating
CO2: Familiarize the concepts of LASER's and Optical fibers with applications.
CO3: Explain the fundamental concepts of Quantum behavior of matter
CO4: Differentiate various electron theories to understand the properties of solids.
CO5: Explain the basic concepts of Semiconductors and identify the type of semiconductors using Hall effect.

Mapping of Course Outcomes with Program Outcomes:

CO/PO	PO1	PO2	PO3	PO4	PO5	PO6	PO7	PO8	PO9	PO10	PO11
CO1	2	1	-	-	-	-	-	1	1	-	-
CO2	2	1	-	-	-	-	-	1	1	-	-
CO3	2	1	-	-	-	-	-	1	1	-	-
CO4	2	1	-	-	-	-	-	1	1	-	-
CO5	2	1	-	-	-	-	-	1	1	-	-

UNIT–I
Wave Optics
Interference: Introduction - Principle of Superposition - Interference of light- Conditions for sustained Interference- Interference in thin films (reflected geometry) – Colours in thin films – Newton's Rings (reflected geometry) – Determination of wavelength and refractive index – Applications.
Diffraction: Introduction – Fresnel and Fraunhofer Diffraction - Diffraction due to Single slit (quantitative), Double slit (qualitative) - N–Slits Intensity distribution curves (qualitative) – Grating spectrum–Rayleigh's criterion - Resolving powers of grating (qualitative) - Applications.
Practice:
1. Determination of Radius of curvature of a plano-convex lens using Newton's Rings.
2. Measurement of Width or thickness of a thin wire by forming interference fringes.
3. Determination of Wavelength of light source using Diffraction grating by normal incidence method.
4. Resolving power of grating.
5. Determination of wavelength of light by using prism.

UNIT–II

Lasers & Optical Fibers

Lasers: Introduction - Characteristics of Lasers – Spontaneous and Stimulated emission of radiation – population inversion- Einstein's coefficients – Relation - significance - Pumping Mechanisms - Ruby laser – Helium-Neon laser - Applications.

Optical Fibers: Introduction – Principle of propagation in Optical Fiber – Angle of acceptance – Expression for Numerical Aperture and condition for propagation – Classification of Optical fibers - Applications.

Practice:

1. Determination of Wavelength of He-Ne laser source by using diffraction grating.

UNIT–III

Quantum Mechanics

Introduction – Matter waves – de Broglie's hypothesis – Davisson and Germer Experiment - Heisenberg's Uncertainty Principle – interpretation of wave function – Schrödinger Time dependent and Time Independent wave equations– Particle in a potential box.

UNIT–IV

Free electron Theory

Free Electron Theory: Introduction–Classical free electron theory (merits and demerits only) -Quantum Free electron theory – Electrical conductivity- Fermi energy state–Fermi Dirac distribution function - Temperature dependence – Density of states.

Band theory of solids: Bloch Theorem – Origin of energy bands in crystalline solids – classification of crystalline solids.

Practice:

1. Study the variation of magnetic field along the axis of a circular coil carrying current by using Stewart and Gee's apparatus.
2. Determination of Frequency of electrically maintained tuning fork by Melde's apparatus.

UNIT–V

Semiconductor Physics

Semiconductors Introduction – Intrinsic semiconductors – density of charge carriers (Qualitative only) – Electrical conductivity –Fermi level - extrinsic semiconductors - P-type & N-type semiconductors-Density of charge carriers (Qualitative) - Dependence of Fermi energy on carrier concentration and temperature–Hall effect-Hall coefficient - Applications of Hall effect–Drift and Diffusion currents - Einstein's equation Working of PN junction diode – Zener diode.

Practice:

1. Determination of V-I characteristics and Breakdown voltage of a Zener diode.
2. Determination of Energy band gap of a semiconductor by using P-N junction diode.
3. Study the relation between Temperature and resistance and finding the constants A & B of a thermistor.
4. Determine the resistivity of a semiconductor by four probe method.

Text books:

1. Engineering Physics by M N Avadhanulu & T.V.S. Arun Murthy, S Chand &Company Ltd, 1st edition 2024. ISBN: 978-93-5870-932-3
2. Engineering Physics by Satyendra Sharma and Jyotshna Sharma, Pearson publications. ISBN: 978-81-3151-178-7.

Reference Books:

1. Concepts of Modern Physics by Authur Beiser, Shobhit Mahajan and S Rai Choudhary, McGraw Hill (2017). ISBN: 9789351341857
2. Engineering Physics by M.R. Srinivasan, New Age international publishers (2009). ISBN: 978-1848290501
3. Optics by Ajoy Ghatak, 6th Edition McGraw Hill Education, 2017. ISBN: 978-9390113590

Web Links:

1. http://nptel.ac.in/courses/122107035/11
2. http://nptel.ac.in/courses/115102023/-
3. https://phet.colorado.edu/en/simulations/category/physics
4. http://physicsgecg.blogspot.in/p/reading-materials.html

Programming for Problem Solving using C

(Common to CE, EEE, ME, ECE, CSE, IT, AIML, CSE(DS), PT & Min.E)

(Syllabus for the batch admitted in the year 2025)

	L	T	P	C
Course Code: 2501CS01	**2**	**0**	**2**	**4**

Course Outcomes: At the end of the Course, Student will be able to:

CO1: Demonstrate basics of computer, algorithm and flow chart for problem solving.
CO2: Make use of an appropriate control structures to solve given problems.
CO3: Solve complex problems using arrays and strings.
CO4: Develop modular programming using functions.
CO5: Demonstrate dynamic memory allocations and file handling using file operations.

Mapping of Course Outcomes with Program Outcomes:

CO/PO	PO 1	PO 2	PO 3	PO 4	PO 5	PO 6	PO 7	PO 8	PO 9	PO 10	PO 11
CO1	2	3	2	1	3	-	-	2	-	-	1
CO2	2	3	2	1	3	-	-	2	-	-	1
CO3	2	3	2	1	3	-	1	2	-	-	1
CO4	2	3	2	1	3	-	1	2	-	-	1
CO5	2	3	2	1	3	-	1	2	-	-	1

Mapping of Course Outcomes with Program Specific Outcomes:

CO/PSO	PSO1	PSO2
CO1	2	2
CO2	2	2
CO3	2	2
CO4	2	2
CO5	2	2

UNIT – I

Introduction to Programming and Problem Solving

Introduction to Programming Languages, Basics of a Computer Program- Algorithms, Algorithmic approach, characteristics of algorithm, Problem solving strategies: Top-down approach, Bottom-up approach, Time and space complexities of algorithms, flowcharts (Using Dia Tool), pseudo code. Structure of C Program, Introduction to Compilation and Execution, Primitive Data Types, Variables, and Constants, Basic Input and Output, operators, keywords, identifiers, Type Conversion, and Casting.

Practice 1:

1. Explore different platforms
   a. Basic linux environment and its editors like Vi, Vim & Emacs etc.
   b. Exposure to turbo C, gcc.
   c. Explore to hacker rank or any other Online coding platform and compiler environment.
   d. “Hello world” in C.

https://www.codechef.com/learn/course/c/CDEVINTRO/problems/CDEV004B

e. Objective: Learn about the syntax of reading from stdin and writing to stdout.
https://www.hackerrank.com/challenges/hello-world-c/problem?isFullScreen=true

f. Write a simple program to read int, float, char and string using scanf() and display using printf() in all the above given platforms.

2. Basics and Operators

a. Sum and Difference of 2 numbers.
Objective: Learn int and float data types.
https://www.hackerrank.com/challenges/sum-numbers-c/problem?isFullScreen=true
https://maya.technicalhub.io/owl-program-details/668b9ec2e069313510b0235a

b. Playing with Characters.
Objective: Learn how to take a character, a string and a sentence as input in C.
https://www.hackerrank.com/challenges/playing-with-characters/problem?isFullScreen=true

c. Bitwise Operators
Objective: Learn how to work with bits (0,1) and bitwise operators.
https://www.hackerrank.com/challenges/bitwise-operators-in-c/problem?isFullScreen=true

d. Conversion of Fahrenheit to Celsius and vice versa.
https://www.codechef.com/practice/course/c/LPCAS03/problems/LCAS30
https://maya.technicalhub.io/owl-program-details/66a0c0dda7d31805366af641

e. Distance travelled by an object.
https://maya.technicalhub.io/owl-program-details/6687c4e9fd042085d9ec254a

f. Calculate Simple interest and compound interest.
https://maya.technicalhub.io/owl-program-details/6687b498dfe02cea4b53e0ab

3. Operators and Expressions, Variables and Type conversions.

a. Evaluate the following expressions
i. a/b*c-b+a*d/3
ii. j = (i++) + (++i)

b. Square root of a given number.

c. Find the area of circle, square, rectangle and triangle.
https://maya.technicalhub.io/owl-program-details/6686546930bfbd35127c869c
https://maya.technicalhub.io/owl-program-details/6688cf91e467bfe336f8352f
https://www.hackerrank.com/challenges/rectangle-area/problem?utm_source=chatgpt.com

https://maya.technicalhub.io/owl-program-details/6688ea3ce467bfe336f8ab9d

d. Find the maximum of three numbers using conditional operator.
https://maya.technicalhub.io/owl-program-details/668690d230bfbd35127c9bf5

e. Take marks of 5 subjects in integers, find the total in integer and average in float.

UNIT – II

Control Structures

Simple sequential programs, Conditional Statements (if, if-else, else if ladder, switch), Loops (for, nested for loop, while, do-while), break and continue, goto statement.

Practice:

1. Conditional Statements
    1. Objective: Understand if and else Conditional statements in C.
       https://www.hackerrank.com/challenges/conditional-statements-in-c/problem?isFullScreen=true
    2. Roots of a Quadratic Equation.
    3. Generate electricity bill.
       https://maya.technicalhub.io/owl-program-details/66868f6730bfbd35127c9ba7
    4. Simulate a calculator using switch case.
    5. Find the given year is a leap year or not.
2. Loops
    a. Objective: Learn the usage of the for loop in C.
       https://www.hackerrank.com/challenges/for-loop-in-c/problem?isFullScreen=true
    b. Sum of the digits of a 5-digit number.
       Objective: Learn the usage of while loop and usage of operators - % and /.
       https://www.hackerrank.com/challenges/sum-of-digits-of-a-five-digit-number/problem?isFullScreen=true
       https://maya.technicalhub.io/owl-program-details/66864717f56afec5c0c917e1
    c. Given number is a prime or not. (Also Prime numbers between a given range.)
       https://maya.technicalhub.io/owl-program-details/6687b69ddfe02cea4b5404a3
    d. Armstrong Number or not.
    e. Palindrome or not.
       https://maya.technicalhub.io/owl-program-details/6687af17dfe02cea4b5376ae
    f. Objective: Print a pattern of numbers using Loops.
       https://www.hackerrank.com/challenges/printing-pattern-2/problem?isFullScreen=true
    g. Construct a Pyramid pattern.
       https://www.codechef.com/practice/course/c/LPCAS02/problems/LCAS20

UNIT – III

Arrays: Arrays indexing, Accessing programs with array of integers, two dimensional arrays, Introduction to Strings, string handling functions.

Sorting Techniques: bubble sort, selection sort.

Searching Techniques: linear, Binary search.

Practice:

1. 1-Dimensional Arrays
    a. Objective: Print the sum and free the memory where the array is stored.
       https://www.hackerrank.com/challenges/1d-arrays-in-c/problem?isFullScreen=true
    b. Objective: Working with indices in array.
    c. Search an element in array (Linear Search).

https://maya.technicalhub.io/owl-program-details/6687c40ffd042085d9ec15d6

d. Find min and max elements in array.
https://maya.technicalhub.io/owl-program-details/66879493dfe02cea4b529041

e. Insert an element into array.
f. Eliminate duplicate elements from array.
https://maya.technicalhub.io/owl-program-details/66e920a1aca93b27f3364b57
g. Sorting of elements in an array using Bubble sort.

2. 2-Demensional Arrays
   a. Sum of two 2-D arrays.
   https://maya.technicalhub.io/owl-program-details/66864fa9f56afec5c0c924f6
   b. Multiplication of two 2-D arrays.
   c. Transpose of a Matrix.
   d. Trace of a Matrix.
   e. Lower Triangular Matrix.
3. Hacker Rank
   a. Objective: print each word of the sentence in a new line.
   b. Count number of alphabets (lowercase, uppercase, consonants, vowels) and digits Lowercase to Uppercase, Uppercase to Lowercase, Toggle case, Sentential case
   https://maya.technicalhub.io/owl-program-details/6698e2fbcb6bd470f35b73d8
   https://maya.technicalhub.io/owl-program-details/6698ef03cb6bd470f35b7c3e
   c. find the frequency of each digit in the given string.
   https://www.hackerrank.com/challenges/frequency-of-digits-1/problem?isFullScreen=true
   d. Find string length, concatenate 2 strings, reverse a string using built-in and without built-in string functions.
   https://maya.technicalhub.io/owl-program-details/6698ed2dcb6bd470f35b7ae7

UNIT – IV

Functions: Introduction to Functions, Function Declaration and Definition, Function call Return **Types and Arguments**, arrays as parameters, Scope and Lifetime of Variables, **storage classes**, **recursion**, functions and arrays.

Practice: Functions in C

1. Objective: Learn simple usage of functions.
   https://www.hackerrank.com/challenges/functions-in-c/problem?isFullScreen=true
2. Objective: Fibonacci Numbers using recursive function.
   https://www.hackerrank.com/challenges/ctci-fibonacci-numbers/problem
3. Objective: N^{th} factorial using recursion.
4. Objective: Find the super digit of the integer.
5. Implement LCM
6. Objective: Calculate the Nth term of series.
   https://www.hackerrank.com/challenges/recursion-in-c/problem?isFullScreen=true

UNIT – V

Pointer: Introduction to Pointers, dereferencing and address operators, pointer and address arithmetic, array manipulation using pointers, **functions & pointers** modifying parameters inside functions using pointers, Command line Arguments, Dynamic memory allocation, Null Pointer, generic pointer, dangling pointer.

File Handling:-Introduction to Files, Using Files in C, Reading from Text Files, Writing to Text Files, Random File Access.

Practice:

1. Pointers
   a. Objective: learn to implement the basic functionalities of pointers in C. https://www.hackerrank.com/challenges/pointer-in-c/problem?isFullScreen=true
   b. Objective: Learn using Pointers with Arrays and Functions. https://www.hackerrank.com/challenges/students-marks-sum/problem?isFullScreen=true
   c. Objective: sort a given array of strings into lexicographically increasing order or into an order in which the string with the lowest length appears first. https://www.hackerrank.com/challenges/sorting-array-of-strings/problem?isFullScreen=true
   d. Find the sum of a 1D array using malloc().
   e. Swap two numbers using functions and pointers - call by value and reference.
   f. Objective: Dynamic Handling requests by a Librarian to place the books in the shelves. https://www.hackerrank.com/challenges/dynamic-array-in-c/problem?isFullScreen=true

2. File handling concepts
   a) Write text into and read text from a file.
   b) Write text into and read text from a binary file using fread() and fwrite().
   c) Copy the contents of one file to another file.
   d) Merge two files into the third file using command-line arguments
   e) Find no. of lines, words and characters in a file.

Text Books:

1 Programming in C, Rema Theraja, Oxford, 2nd edition. ISBN 93-5497-9

2 "The C Programming Language", Brian W. Kernighan and Dennis M. Ritchie, Prentice-Hall. ISBN 13: 9780131103627

Reference Books:

1. Computing fundamentals and C Programming, Balagurusamy, E., McGraw-Hill Education. ISBN.No: 9352604172
2. Byron Gottfried, Schaum's Outline of Programming with C, McGraw-Hill. ISBN No. 0071367993
3. Let Us C Yashwanth,Kanetkar, Eighth edition, BPB Publications.ISBN No. 1934015253
4. Programming in C A-Practical Approach, Ajay Mittal. Pearson Education.ISBN No. 9788131729342
5. R G Dromey How to Solve It by Computer (Prentice-Hall International Series in Computer Science.ISBN-13 : 978-0134340012

Web Links:

1 https://www.hackerrank.com/

2 https://onlinecourses.nptel.ac.in/noc22_cs40/preview

3 https://archive.nptel.ac.in/courses/106/104/106104128/

Additional Practice:

S.No.	Difficulty	Problem Name	Link
1	Easy	Add Two Numbers	https://www.codechef.com/practice/course/cpp/PCPP05/problems/FLOW001
2	Easy	Enormous Input Test	https://www.codechef.com/practice/course/basic-programming-concepts/DIFF500/problems/INTEST
3	Easy	ATM	https://www.codechef.com/practice/course/1-star-difficulty-problems/DIFF1200/problems/ATM2
4	Easy	Number Mirror	https://www.codechef.com/practice/course/python/PPY01/problems/START01
5	Easy	Sum of Digits	https://www.codechef.com/practice/course/basic-math/BASICMATH/problems/FLOW006
6	Easy	Remainder	https://www.codechef.com/practice/course/basic-math/BASICMATH/problems/FLOW002
7	Easy	First and Last Digit	https://www.codechef.com/practice/course/basic-programming-concepts/DIFF500/problems/FLOW004
8	Easy	Reverse The Number	https://www.codechef.com/practice/course/logical-problems/DIFF800/problems/FLOW007
9	Easy	Life, the Universe, and Everything	https://staging.codechef.com/practice/course/cpp/PRACTICECPP2/problems/TEST
10	Easy	Chef and Operators	https://www.codechef.com/practice/course/logical-problems/DIFF800/problems/CHOPRT
11	Easy	Difference and Sum	https://www.codechef.com/problems/DIFFSUM
12	Easy	Second Largest	https://www.codechef.com/practice/course/arrays/ARRAYS/problems/LARGESECOND
13	Easy	Two Sum	https://leetcode.com/problems/two-sum/
14	Easy	Reverse Integer	https://leetcode.com/problems/reverse-integer/
15	Easy	Palindrome Number	https://leetcode.com/problems/palindrome-number/
16	Easy	Roman to Integer	https://leetcode.com/problems/roman-to-integer/
17	Easy	Remove Duplicates from Sorted Array	https://leetcode.com/problems/remove-duplicates-from-sorted-array/
18	Easy	Remove Element	https://leetcode.com/problems/remove-element/
19	Easy	Find the Index of the First Occurrence in a String	https://leetcode.com/problems/find-the-index-of-the-first-occurrence-in-a-string/
20	Easy	Length of Last Word	https://leetcode.com/problems/length-of-last-word/
21	Easy	Plus One	https://leetcode.com/problems/plus-one/
22	Easy	Merge Sorted Array	https://leetcode.com/problems/merge-sorted-array/

23	Easy	Majority Element	https://leetcode.com/problems/majority-element/
24	Easy	Single Number	https://leetcode.com/problems/single-number/
25	Easy	Move Zeroes	https://leetcode.com/problems/move-zeroes/
26	Easy	Missing Number	https://leetcode.com/problems/missing-number/
27	Easy	Contains Duplicate	https://leetcode.com/problems/contains-duplicate/
28	Easy	Valid Anagram	https://leetcode.com/problems/valid-anagram/
29	Easy	Valid Parentheses	https://leetcode.com/problems/valid-parentheses/
30	Easy	Fibonacci Number	https://leetcode.com/problems/fibonacci-number/
31	Easy	Climbing Stairs	https://leetcode.com/problems/climbing-stairs/
32	Easy	Binary Search	https://leetcode.com/problems/binary-search/
33	Easy	Number of 1 Bits	https://leetcode.com/problems/number-of-1-bits/
34	Easy	Hamming Weight	https://leetcode.com/problems/number-of-1-bits/description/
35	Easy	Power of Two	https://leetcode.com/problems/power-of-two/
36	Easy	Power of Three	https://leetcode.com/problems/power-of-three/
37	Easy	Same Tree	https://leetcode.com/problems/same-tree/
38	Easy	Maximum Subarray	https://leetcode.com/problems/maximum-subarray/
39	Medium	Chef and Notebooks	https://www.codechef.com/problems/CNOTE
40	Medium	Chef and Wildcard Matching	https://www.codechef.com/search?q=TWOSTR
41	Medium	Minimum Moves	https://www.codechef.com/search?q=SALARY
42	Medium	Lucky Four	https://www.codechef.com/search?q=LUCKFOUR
43	Medium	Maximum Difference	https://www.codechef.com/search?q=MAXDIFF
44	Medium	Uncle Johny	https://www.codechef.com/search?q=JOHNY
45	Medium	Chef and Strings	https://www.codechef.com/search?q=CHEFSTLT
46	Medium	Two vs Rib	https://www.codechef.com/search?q=TWOVRIB
47	Medium	Chef and Array	https://www.codechef.com/search?q=CHEFARRP

48	Medium	Add Two Numbers	https://leetcode.com/problems/add-two-numbers/
49	Medium	Longest Substring Without Repeating Characters	https://leetcode.com/problems/longest-substring-without-repeating-characters/
50	Medium	Longest Palindromic Substring	https://leetcode.com/problems/longest-palindromic-substring/
51	Medium	3Sum	https://leetcode.com/problems/3sum/
52	Medium	Container With Most Water	https://leetcode.com/problems/container-with-most-water/
53	Medium	Integer to Roman	https://leetcode.com/problems/integer-to-roman/
54	Medium	String to Integer (atoi)	https://leetcode.com/problems/string-to-integer-atoi/
55	Medium	Divide Two Integers	https://leetcode.com/problems/divide-two-integers/
56	Medium	Rotate Image	https://leetcode.com/problems/rotate-image/
57	Medium	Set Matrix Zeroes	https://leetcode.com/problems/set-matrix-zeroes/
58	Medium	Spiral Matrix	https://leetcode.com/problems/spiral-matrix/
59	Medium	Jump Game	https://leetcode.com/problems/jump-game/
60	Medium	Permutations	https://leetcode.com/problems/permutations/
61	Medium	Combination Sum	https://leetcode.com/problems/combination-sum/
62	Medium	Search in Rotated Sorted Array	https://leetcode.com/problems/search-in-rotated-sorted-array/
63	Medium	Group Anagrams	https://leetcode.com/problems/group-anagrams/
64	Medium	Sort Colors	https://leetcode.com/problems/sort-colors/
65	Medium	Subsets	https://leetcode.com/problems/subsets/
66	Medium	Reverse Linked List II	https://leetcode.com/problems/reverse-linked-list-ii/
67	Medium	Add Two Numbers II	https://leetcode.com/problems/add-two-numbers-ii/
68	Medium	Reorder List	https://leetcode.com/problems/reorder-list/
69	Medium	Linked List Cycle II	https://leetcode.com/problems/linked-list-cycle-ii/

70	Medium	K-th Largest Element in an Array	https://leetcode.com/problems/kth-largest-element-in-an-array/
71	Medium	Product of Array Except Self	https://leetcode.com/problems/product-of-array-except-self/
72	Medium	Word Search	https://leetcode.com/problems/word-search/
73	Medium	Unique Paths	https://leetcode.com/problems/unique-paths/
74	Medium	Minimum Path Sum	https://leetcode.com/problems/minimum-path-sum/
75	Medium	Temperature Converter - II	https://www.codechef.com/practice/course/c/LPCAS03/problems/LCAS30B
76	Medium	Reverse	https://www.hackerrank.com/challenges/reverse-array-c/problem?isFullScreen=true
77	Medium	Sentence in a new line	https://www.hackerrank.com/challenges/printing-tokens-/problem?isFullScreen=true
78	Hard	Median of Two Sorted Arrays	https://leetcode.com/problems/median-of-two-sorted-arrays/
79	Hard	Regular Expression Matching	https://leetcode.com/problems/regular-expression-matching/
80	Hard	Wildcard Matching	https://leetcode.com/problems/wildcard-matching/
81	Hard	Trapping Rain Water	https://leetcode.com/problems/trapping-rain-water/
82	Hard	First Missing Positive	https://leetcode.com/problems/first-missing-positive/
83	Hard	Longest Valid Parentheses	https://leetcode.com/problems/longest-valid-parentheses/
84	Hard	Merge k Sorted Lists	https://leetcode.com/problems/merge-k-sorted-lists/
85	Hard	Reverse Nodes in k-Group	https://leetcode.com/problems/reverse-nodes-in-k-group/description/
86	Hard	Sudoku Solver	https://leetcode.com/problems/sudoku-solver/
87	Hard	N-Queens	https://leetcode.com/problems/n-queens/description/
88	Hard	Edit Distance	https://leetcode.com/problems/edit-distance/
89	Hard	Word Ladder II	https://leetcode.com/problems/word-ladder-ii/
90	Hard	Maximal Rectangle	https://leetcode.com/problems/maximal-rectangle/
91	Hard	Binary Tree Maximum Path Sum	https://leetcode.com/problems/binary-tree-maximum-path-sum/
92	Hard	Serialize and Deserialize Binary Tree	https://leetcode.com/problems/serialize-and-deserialize-binary-tree/

93	Hard	Variadic functions in C	https://www.hackerrank.com/challenges/variadic-functions-in-c/problem?isFullScreen=true
94	Hard	Small Triangles, Large Triangles	https://www.hackerrank.com/challenges/small-triangles-large-triangles/problem?isFullScreen=true
95	Hard	Permutations of Strings	https://www.hackerrank.com/challenges/permutations-of-strings/problem?isFullScreen=true

Maya Programs

S.No.	Problem Name	Maya Program Link
1	Can Cross the Bridge	https://maya.technicalhub.io/owl-program-details/6686308df56afec5c0c8e2dd
2	Hypotenuse	https://maya.technicalhub.io/owl-program-details/6686404ef56afec5c0c90135
3	Heron's Formula	https://maya.technicalhub.io/owl-program-details/66864474f56afec5c0c911f5
4	Loss Percentage	https://maya.technicalhub.io/owl-program-details/66864868f56afec5c0c91a4a
5	King Tours	https://maya.technicalhub.io/owl-program-details/66864c96f56afec5c0c921f1
6	Profit Percentage	https://maya.technicalhub.io/owl-program-details/66865237f56afec5c0c92694
7	Area and Perimeter of Square	https://maya.technicalhub.io/owl-program-details/6686546930bfbd35127c869c
8	Volume of Sphere	https://maya.technicalhub.io/owl-program-details/6686565530bfbd35127c8818
9	Required Points	https://maya.technicalhub.io/owl-program-details/66865b1130bfbd35127c8a04
10	Instant Noodles	https://maya.technicalhub.io/owl-program-details/66865ddb30bfbd35127c8c0a
11	Find Second Number	https://maya.technicalhub.io/owl-program-details/668660a530bfbd35127c8cde
12	Kmph to Mps	https://maya.technicalhub.io/owl-program-details/668663ce30bfbd35127c8dfb
13	Inches to Centimeters	https://maya.technicalhub.io/owl-program-details/6686665e30bfbd35127c8f3a
14	Capacity	https://maya.technicalhub.io/owl-program-details/668678aa30bfbd35127c95b9
15	Average of Two Numbers	https://maya.technicalhub.io/owl-program-details/6687b002dfe02cea4b5389d6
16	Compound Interest	https://maya.technicalhub.io/owl-program-details/6687b498dfe02cea4b53e0ab
17	Average Weight	https://maya.technicalhub.io/owl-program-details/6687b93edfe02cea4b54367a
18	Arithmetic Operations	https://maya.technicalhub.io/owl-program-details/6687bda0dfe02cea4b5488a1
19	Distance Between Two Points	https://maya.technicalhub.io/owl-program-details/6687c4e9fd042085d9ec254a
20	Days into Years, Weeks	https://maya.technicalhub.io/owl-program-details/6687cad1fd042085d9ec95a8

21	Convert Seconds to Hours, Minutes and Seconds	https://maya.technicalhub.io/owl-program-details/6688c926e467bfe336f8007b
22	Hours and Minutes	https://maya.technicalhub.io/owl-program-details/6688e4f0e467bfe336f89673
23	Romeo and Juliet	https://maya.technicalhub.io/owl-program-details/6688e068e467bfe336f87a8b
24	Gross Salary of an Employee	https://maya.technicalhub.io/owl-program-details/6688dd95e467bfe336f87682
25	Surface Area and Volume of a Cube	https://maya.technicalhub.io/owl-program-details/6688d909e467bfe336f872ca
26	Area of Trapezium	https://maya.technicalhub.io/owl-program-details/6688d637e467bfe336f86c5e
27	Swap Two Numbers	https://maya.technicalhub.io/owl-program-details/6688d2d0e467bfe336f84f55
28	Last Two Digits of a Given Year	https://maya.technicalhub.io/owl-program-details/6688ccfae467bfe336f81f90
29	Arithmetic Operations	https://maya.technicalhub.io/owl-program-details/6687bda0dfe02cea4b5488a1
30	Uppercase Letters in a String	https://maya.technicalhub.io/owl-program-details/669a2453c03fc56b320b215c
31	Factors Finding	https://maya.technicalhub.io/owl-program-details/66866c4a30bfbd35127c90b4
32	String Copy	https://maya.technicalhub.io/owl-program-details/669a03ded62716a9c6d4fa9a
33	Recursive Digit Sum	https://www.hackerrank.com/challenges/recursive-digit-sum/problem

	Basic Programs	**Aditya's Internal Coding Platform (Maya)**	**Code chef**	**Hacker rank**	**Leet code**	**Total**
Unit-1	4	8	2	5	0	**19**
Unit-2	4	4	1	4	0	**13**
Unit-3	8	7	0	2	0	**17**
Unit-4	3	0	0	3	0	**6**
Unit-5	7	0	4	4	0	**15**
Additional Practice	0	33	22	5	68	**128**
Total	**26**	**52**	**29**	**23**	**68**	**198**

Problem Solving Through C Programming
(Common to CE, EEE, ME, ECE, CSE, AIML, CSE(DS), PT & Min.E)
(Revised Syllabus for batches admitted from 2026 Onwards)

	L	T	P	C
Course Code: 2601DS01	**2**	**0**	**2**	**4**

Course Outcomes: At the end of the Course, Student will be able to:

CO1: Demonstrate basics of computer, algorithm and flow chart for problem solving.
CO2: Make use of an appropriate control structures to solve given problems.
CO3: Solve complex problems using arrays and strings.
CO4: Develop modular programming using functions and dynamic memory allocation.
CO5: Develop programs using structures and file handling operations.

Mapping of Course Outcomes with Program Outcomes:

CO	PO1	PO2	PO3	PO4	PO5	PO6	PO7	PO8	PO9	PO10	PO11
CO1	3	2	1	1	2	–	–	–	–	–	1
CO2	2	3	3	1	2	–	–	1	–	–	1
CO3	2	3	3	1	2	–	–	1	1	–	1
CO4	2	3	3	1	3	–	–	1	1	–	1
CO5	2	3	3	1	3	–	–	2	1	–	1

Mapping of Course Outcomes with Program Specific Outcomes:

CO/PSO	PSO1	PSO2
CO1	2	2
CO2	2	2
CO3	2	2
CO4	2	2
CO5	2	2

UNIT – I
Introduction to Programming and Problem Solving
Introduction to Programming Languages, Basics of a Computer Program- Algorithms, characteristics of algorithm, flowcharts, pseudo code.
Structure of C Program, Introduction to Compilation and Execution, Primitive Data Types, Variables, and Constants, Basic Input and Output, operators, keywords, identifiers, Type Conversion, and Casting and operator precedence.

Practice 1:

1. Explore different platforms
   a. Basic linux environment and its editors like Vi, Vim & Emacs etc.
   b. Exposure to turbo C, gcc.
   c. Explore to hacker rank or any other Online coding platform and compiler environment.

d. "Hello world" in C.
https://www.codechef.com/learn/course/c/CDEVINTRO/problems/CDEV004B
e. Objective: Learn about the syntax of reading from stdin and writing to stdout.
https://www.hackerrank.com/challenges/hello-world-c/problem?isFullScreen=true
f. Write a simple program to read int, float, char and string using scanf() and display using printf() in all the above given platforms.

2. Basics and Operators
a. Sum and Difference of 2 numbers.
Objective: Learn int and float data types.
https://www.hackerrank.com/challenges/sum-numbers-c/problem?isFullScreen=true
b. Playing with Characters.
Objective: Learn how to take a character, a string and a sentence as input in C.
https://www.hackerrank.com/challenges/playing-with-characters/problem?isFullScreen=true

c. Bitwise Operators
Objective: Learn how to work with bits (0,1) and bitwise operators.
https://www.hackerrank.com/challenges/bitwise-operators-in-c/problem?isFullScreen=true

d. Conversion of Fahrenheit to Celsius and vice versa.
https://www.codechef.com/practice/course/c/LPCAS03/problems/LCAS30

e. Distance travelled by an object.
f. Calculate Simple interest and compound interest.
https://maya.technicalhub.io/owl-program-details/6687b498dfe02cea4b53e0ab

3. Operators and Expressions, Variables and Type conversions.
a. Evaluate the following expressions
i. a/b*c-b+a*d/3
ii. j = (i++) + (++i)
b. Square root of a given number.
c. Find the area of circle, square, rectangle and triangle.

https://www.hackerrank.com/challenges/rectangle-area/problem?utm_source=chatgpt.com

d. Find the maximum of three numbers using conditional operator.
e. Take marks of 5 subjects in integers, find the total in integer and average in float.

Scenario Based :

A rectangular plate of length N cm and width M cm. If you wants to make a wireframe around the plate, The wireframe costs X rupees per cm. Determine the cost needs to buy the wireframe.

UNIT – II
Control Structures Conditional Statements (if, if-else, else if ladder, switch), Loops (for, nested for loop, while, do-while), break and continue, goto statement.

Practice:
1. Conditional Statements
2. Objective: Understand if and else Conditional statements in C.
https://www.hackerrank.com/challenges/conditional-statements-in-c/problem?isFullScreen=true
3. Roots of a Quadratic Equation.

4. Generate electricity bill.
5. Simulate a calculator using switch case.
6. Find the given year is a leap year or not.
7. Loops
8. Objective: Learn the usage of the for loop in C. https://www.hackerrank.com/challenges/for-loop-in-c/problem?isFullScreen=true
9. Sum of the digits of a 5-digit number.
   Objective: Learn the usage of while loop and usage of operators - % and /.
   https://www.hackerrank.com/challenges/sum-of-digits-of-a-five-digit-number/problem?isFullScreen=true
10. Given number is a prime or not. (Also Prime numbers between a given range.)

11. Armstrong Number or not.
12. Palindrome or not.
13. Objective: Print a pattern of numbers using Loops.
    https://www.hackerrank.com/challenges/printing-pattern-2/problem?isFullScreen=true
14. Construct a Pyramid pattern.
    https://www.codechef.com/practice/course/c/LPCAS02/problems/LCAS20

Scenario based:

1. A traffic signal controller receives a signal code: 1 = Red, 2 = Yellow, 3 = Green. For an input signal code of 2, display the corresponding traffic instruction. Develop the program using a switch statement.

Conditions

- The signal code must be 1, 2, or
- 1 = Red → "Stop", 2 = Yellow → "Get Ready", 3 = Green → "Go".
- Use a switch statement to select the correct instruction.
- Display "Invalid Signal Code" for any other value.

2. A college wants to monitor a student's attendance for a particular semester. The academic office records attendance for each working day using 1 for Present and 0 for Absent. The program should first accept the number of working days and then read the attendance status for each day. Using a for loop, count the number of days the student was present and display the total attendance.

Conditions

- Attendance value should be read only as 0 (Absent) or 1 (Present); any other value should be treated as invalid.
- Number of working days must be a positive integer before the loop begins reading attendance values.
- The loop must process exactly N values, matching the number of working days entered.
- The attendance count must never exceed the number of working days.

UNIT – III

Arrays: Definition, types, 1-D array(declaration, initialization, representation, accessing, input and output), 2-D(declaration, initialization, representation, accessing, input and output), searching (Linear search, Binary Search non recursive) and sorting(Bubble Sort, Selection Sort, Insertion Sort).
Introduction to Strings: declaration, initialization, representation, accessing, input and output, string handling functions.
Practice:

1. 1-Dimensional Arrays
   a. Objective: Print the sum and free the memory where the array is stored.
      https://www.hackerrank.com/challenges/1d-arrays-in-c/problem?isFullScreen=true
   b. Objective: Working with indices in array.
      Search an element in array .
   c. Find min and max elements in array.
   d. Insert an element into array.
   e. Eliminate duplicate elements from array.
   f. Sorting of elements in an array
2. 2-Demensional Arrays
   a. Sum of two 2-D arrays.
   b. Multiplication of two 2-D arrays.
   c. Transpose of a Matrix.
   d. Trace of a Matrix.
   e. Lower Triangular Matrix.
   f. Strings
   g. Objective: print each word of the sentence in a new line.
   h. Count number of alphabets (lowercase, uppercase, consonants, vowels) and digits Lowercase to Uppercase, Uppercase to Lowercase, Toggle case, Sentential case
   i. find the frequency of each digit in the given string.
      https://www.hackerrank.com/challenges/frequency-of-digits-1/problem?isFullScreen=true
   j. Find string length, concatenate 2 strings, reverse a string using built-in and without built-in string functions.

Scenario Based:

1. A teacher wants to quickly analyse the marks scored by students in a class test without manually going through the answer sheets. Develop a C program that stores the marks of N students in an array, calculates the total and average marks, finds the highest and lowest scoring student, and searches whether a given mark exists in the array.

Conditions

- Number of students N should be taken as input before storing marks.
- Average should be calculated correctly for all valid marks.
- Highest and lowest marks should be identified from the array.
- Searching should indicate whether the given mark is present.

2. A college maintains student names in different formats. Some names are entered completely in lowercase, while others are entered completely in uppercase. Develop a C program that accepts a student's name and converts all lowercase letters to uppercase and all uppercase letters to lowercase.

Conditions

- The program should accept the student's name as input.

- Lowercase letters should be converted to uppercase.
- Uppercase letters should be converted to lowercase.
- Spaces between words should remain unchanged.
- The converted name should be displayed as output.

UNIT – IV

Pointer: Introduction to Pointers, dereferencing and address operators, pointer arithmetic, array manipulation using pointers, Dynamic memory allocation, Null Pointer, generic pointer, dangling pointer, pointer to pointer.
Functions: Introduction to Functions, Function Declaration and Definition, Function call Return **Types and Arguments**, Scope and Lifetime of Variables (block scope, function scope, program scope and file scope), **storage classes**, **recursion**, functions and arrays, Command line Arguments, functions and pointers.

Practice:

1. **Pointers**
   a. Objective: learn to implement the basic functionalities of pointers in C. https://www.hackerrank.com/challenges/pointer-in-c/problem?isFullScreen=true
   b. Objective: Learn using Pointers with Arrays and Functions. https://www.hackerrank.com/challenges/students-marks-sum/problem?isFullScreen=true
   c. Objective: sort a given array of strings into lexicographically increasing order or into an order in which the string with the lowest length appears first. https://www.hackerrank.com/challenges/sorting-array-of-strings/problem?isFullScreen=true
   d. Find the sum of a 1D array using malloc().
   e. Swap two numbers using functions and pointers - call by value and reference.
   f. Objective: Dynamic Handling requests by a Librarian to place the books in the shelves. https://www.hackerrank.com/challenges/dynamic-array-in-c/problem?isFullScreen=true

2. **Functions in C**

a. Objective: Learn simple usage of functions. https://www.hackerrank.com/challenges/functions-in-c/problem?isFullScreen=true
b. Objective: Fibonacci Numbers using recursive function. https://www.hackerrank.com/challenges/ctci-fibonacci-numbers/problem
c. Objective: N^{th} factorial using recursion.
d. Objective: Find the super digit of the integer.
e. Implement LCM
f. Objective: Calculate the Nth term of series. https://www.hackerrank.com/challenges/recursion-in-c/problem?isFullScreen=true

Scenario Based:
A college wants to calculate the total marks obtained by a student in three subjects. Develop a C program that accepts the marks obtained in three subjects and uses a user-defined function to calculate the total marks. The function must receive the subject marks as arguments, calculate the total, and return the result to the main function, which then displays it.

Conditions

- The marks for each subject must be between 0 and 100.
- The program must accept marks for exactly three subjects.
- A user-defined function must be used to calculate the total marks.
- The function must receive the subject marks as arguments.
- The function must return the calculated total.
- The program must display the total marks returned by the function.

UNIT – V

Structures and Unions: Introduction, Nested Structures, Arrays of Structures, Structures and Functions, Self-Referential Structures, structures and pointers. Unions, Enumerated Data Type - enum variables, Using Typedef keyword, Bit Fields.

File Handling:-Introduction to Files, Using Files in C, Reading from Text Files, Writing to Text Files, File Operations, Random File Access.

Practice:

1. **Structures**
   1. Write a C program to find the total, average of n students using structures
   2. Copy one structure variable to another structure of the same type.
   3. Read student name and marks from the command line and display the student details along with the total.
2. **File handling concepts**
   a) Write text into and read text from a file.
   b) Write text into and read text from a binary file using fread() and fwrite().
   c) Copy the contents of one file to another file.
   d) Merge two files into the third file using command-line arguments
   e) Find no. of lines, words and characters in a file.

Scenario Based:

A college maintains student details, marks, attendance and grades. Currently, records are maintained manually, making it difficult to search, update, and retrieve a particular student's information. Develop a C program that creates a student data file, stores student ID, name, course, marks and attendance, displays all records, searches for a student using ID, updates marks or attendance, appends new student records, and identifies students eligible for examination based on attendance.

Conditions

- Student ID should uniquely identify a student record.
- Attendance should be used to determine examination eligibility according to the defined attendance rule.
- The program should support adding, displaying, searching, updating and appending records.
- File operations should be used for persistent storage.

Text Books:

1 Programming in C, Rema Theraja, Oxford, 2nd edition. ISBN 93-5497-9

2 "The C Programming Language", Brian W. Kernighan and Dennis M. Ritchie, Prentice-Hall. ISBN 13: 9780131103627

Reference Books:

1. Computing fundamentals and C Programming, Balagurusamy, E., McGraw-Hill Education. ISBN.No: 9352604172
2. Byron Gottfried, Schaum's Outline of Programming with C, McGraw-Hill. ISBN No. 0071367993
3. Let Us C Yashwanth,Kanetkar, Eighth edition, BPB Publications.ISBN No. 1934015253
4. Programming in C A-Practical Approach, Ajay Mittal. Pearson Education.ISBN No. 9788131729342
5. R G Dromey How to Solve It by Computer (Prentice-Hall International Series in Computer Science.ISBN-13 : 978-0134340012

Web Links:

1 https://www.hackerrank.com/
2 https://onlinecourses.nptel.ac.in/noc22_cs40/preview
3 https://archive.nptel.ac.in/courses/106/104/106104128/

Additional Practice:

S.No.	Difficulty	Problem Name	Link
1	Easy	Add Two Numbers	https://www.codechef.com/practice/course/cpp/PCPP05/problems/FLOW001
2	Easy	Enormous Input Test	https://www.codechef.com/practice/course/basic-programming-concepts/DIFF500/problems/INTEST
3	Easy	ATM	https://www.codechef.com/practice/course/1-star-difficulty-problems/DIFF1200/problems/ATM2
4	Easy	Number Mirror	https://www.codechef.com/practice/course/python/PPY01/problems/START01
5	Easy	Sum of Digits	https://www.codechef.com/practice/course/basic-math/BASICMATH/problems/FLOW006
6	Easy	Remainder	https://www.codechef.com/practice/course/basic-math/BASICMATH/problems/FLOW002
7	Easy	First and Last Digit	https://www.codechef.com/practice/course/basic-programming-concepts/DIFF500/problems/FLOW004
8	Easy	Reverse The Number	https://www.codechef.com/practice/course/logical-problems/DIFF800/problems/FLOW007
9	Easy	Life, the Universe, and Everything	https://staging.codechef.com/practice/course/cpp/PRACTICECPP2/problems/TEST
10	Easy	Chef and Operators	https://www.codechef.com/practice/course/logical-problems/DIFF800/problems/CHOPRT
11	Easy	Difference and Sum	https://www.codechef.com/problems/DIFFSUM
12	Easy	Second Largest	https://www.codechef.com/practice/course/arrays/ARRAYS/problems/LARGESECOND
13	Easy	Two Sum	https://leetcode.com/problems/two-sum/
14	Easy	Reverse Integer	https://leetcode.com/problems/reverse-integer/
15	Easy	Palindrome Number	https://leetcode.com/problems/palindrome-number/
16	Easy	Roman to Integer	https://leetcode.com/problems/roman-to-integer/
17	Easy	Remove Duplicates from Sorted Array	https://leetcode.com/problems/remove-duplicates-from-sorted-array/
18	Easy	Remove Element	https://leetcode.com/problems/remove-element/
19	Easy	Find the Index of the First Occurrence in a String	https://leetcode.com/problems/find-the-index-of-the-first-occurrence-in-a-string/
20	Easy	Length of Last Word	https://leetcode.com/problems/length-of-last-word/
21	Easy	Plus One	https://leetcode.com/problems/plus-one/
22	Easy	Merge Sorted Array	https://leetcode.com/problems/merge-sorted-array/
23	Easy	Majority Element	https://leetcode.com/problems/majority-element/

24	Easy	Single Number	https://leetcode.com/problems/single-number/
25	Easy	Move Zeroes	https://leetcode.com/problems/move-zeroes/
26	Easy	Missing Number	https://leetcode.com/problems/missing-number/
27	Easy	Contains Duplicate	https://leetcode.com/problems/contains-duplicate/
28	Easy	Valid Anagram	https://leetcode.com/problems/valid-anagram/
29	Easy	Valid Parentheses	https://leetcode.com/problems/valid-parentheses/
30	Easy	Fibonacci Number	https://leetcode.com/problems/fibonacci-number/
31	Easy	Climbing Stairs	https://leetcode.com/problems/climbing-stairs/
32	Easy	Binary Search	https://leetcode.com/problems/binary-search/
33	Easy	Number of 1 Bits	https://leetcode.com/problems/number-of-1-bits/
34	Easy	Hamming Weight	https://leetcode.com/problems/number-of-1-bits/description/
35	Easy	Power of Two	https://leetcode.com/problems/power-of-two/
36	Easy	Power of Three	https://leetcode.com/problems/power-of-three/
37	Easy	Same Tree	https://leetcode.com/problems/same-tree/
38	Easy	Maximum Subarray	https://leetcode.com/problems/maximum-subarray/
39	Medium	Chef and Notebooks	https://www.codechef.com/problems/CNOTE
40	Medium	Chef and Wildcard Matching	https://www.codechef.com/search?q=TWOSTR
41	Medium	Minimum Moves	https://www.codechef.com/search?q=SALARY
42	Medium	Lucky Four	https://www.codechef.com/search?q=LUCKFOUR
43	Medium	Maximum Difference	https://www.codechef.com/search?q=MAXDIFF
44	Medium	Uncle Johny	https://www.codechef.com/search?q=JOHNY
45	Medium	Chef and Strings	https://www.codechef.com/search?q=CHEFSTLT
46	Medium	Two vs Rib	https://www.codechef.com/search?q=TWOVRIB
47	Medium	Chef and Array	https://www.codechef.com/search?q=CHEFARRP
48	Medium	Add Two Numbers	https://leetcode.com/problems/add-two-numbers/
49	Medium	Longest Substring Without Repeating Characters	https://leetcode.com/problems/longest-substring-without-repeating-characters/
50	Medium	Longest Palindromic Substring	https://leetcode.com/problems/longest-palindromic-substring/
51	Medium	3Sum	https://leetcode.com/problems/3sum/
52	Medium	Container With Most Water	https://leetcode.com/problems/container-with-most-water/

53	Medium	Integer to Roman	https://leetcode.com/problems/integer-to-roman/
54	Medium	String to Integer (atoi)	https://leetcode.com/problems/string-to-integer-atoi/
55	Medium	Divide Two Integers	https://leetcode.com/problems/divide-two-integers/
56	Medium	Rotate Image	https://leetcode.com/problems/rotate-image/
57	Medium	Set Matrix Zeroes	https://leetcode.com/problems/set-matrix-zeroes/
58	Medium	Spiral Matrix	https://leetcode.com/problems/spiral-matrix/
59	Medium	Jump Game	https://leetcode.com/problems/jump-game/
60	Medium	Permutations	https://leetcode.com/problems/permutations/
61	Medium	Combination Sum	https://leetcode.com/problems/combination-sum/
62	Medium	Search in Rotated Sorted Array	https://leetcode.com/problems/search-in-rotated-sorted-array/
63	Medium	Group Anagrams	https://leetcode.com/problems/group-anagrams/
64	Medium	Sort Colors	https://leetcode.com/problems/sort-colors/
65	Medium	Subsets	https://leetcode.com/problems/subsets/
66	Medium	Reverse Linked List II	https://leetcode.com/problems/reverse-linked-list-ii/
67	Medium	Add Two Numbers II	https://leetcode.com/problems/add-two-numbers-ii/
68	Medium	Reorder List	https://leetcode.com/problems/reorder-list/
69	Medium	Linked List Cycle II	https://leetcode.com/problems/linked-list-cycle-ii/
70	Medium	K-th Largest Element in an Array	https://leetcode.com/problems/kth-largest-element-in-an-array/
71	Medium	Product of Array Except Self	https://leetcode.com/problems/product-of-array-except-self/
72	Medium	Word Search	https://leetcode.com/problems/word-search/
73	Medium	Unique Paths	https://leetcode.com/problems/unique-paths/
74	Medium	Minimum Path Sum	https://leetcode.com/problems/minimum-path-sum/
75	Medium	Temperature Converter - II	https://www.codechef.com/practice/course/c/LPCAS03/problems/LCAS30B
76	Medium	Reverse	https://www.hackerrank.com/challenges/reverse-array-c/problem?isFullScreen=true
77	Medium	Sentence in a new line	https://www.hackerrank.com/challenges/printing-tokens-/problem?isFullScreen=true

78	Hard	Median of Two Sorted Arrays	https://leetcode.com/problems/median-of-two-sorted-arrays/
79	Hard	Regular Expression Matching	https://leetcode.com/problems/regular-expression-matching/
80	Hard	Wildcard Matching	https://leetcode.com/problems/wildcard-matching/
81	Hard	Trapping Rain Water	https://leetcode.com/problems/trapping-rain-water/
82	Hard	First Missing Positive	https://leetcode.com/problems/first-missing-positive/
83	Hard	Longest Valid Parentheses	https://leetcode.com/problems/longest-valid-parentheses/
84	Hard	Merge k Sorted Lists	https://leetcode.com/problems/merge-k-sorted-lists/
85	Hard	Reverse Nodes in k-Group	https://leetcode.com/problems/reverse-nodes-in-k-group/description/
86	Hard	Sudoku Solver	https://leetcode.com/problems/sudoku-solver/
87	Hard	N-Queens	https://leetcode.com/problems/n-queens/description/
88	Hard	Edit Distance	https://leetcode.com/problems/edit-distance/
89	Hard	Word Ladder II	https://leetcode.com/problems/word-ladder-ii/
90	Hard	Maximal Rectangle	https://leetcode.com/problems/maximal-rectangle/
91	Hard	Binary Tree Maximum Path Sum	https://leetcode.com/problems/binary-tree-maximum-path-sum/
92	Hard	Serialize and Deserialize Binary Tree	https://leetcode.com/problems/serialize-and-deserialize-binary-tree/
93	Hard	Variadic functions in C	https://www.hackerrank.com/challenges/variadic-functions-in-c/problem?isFullScreen=true
94	Hard	Small Triangles, Large Triangles	https://www.hackerrank.com/challenges/small-triangles-large-triangles/problem?isFullScreen=true
95	Hard	Permutations of Strings	https://www.hackerrank.com/challenges/permutations-of-strings/problem?isFullScreen=true

Unit	Basic Programs	CodeChef	HackerRank	LeetCode	Scenario Based	Total
Unit-1	6	4	4	0	1	**15**
Unit-2	7	5	5	0	2	**19**
Unit-3	9	6	6	15	2	**38**
Unit-4	8	3	8	5	1	**25**
Unit-5	8	2	2	0	1	**13**
TOTAL	**38**	**20**	**25**	**20**	**7**	**110**

Business Intelligence Lab

(Common to CE, EEE, ME, ECE, CSE, IT, AIML, CSE(DS), PT & Min.E)

(Syllabus for the batch admitted in the year 2025)

	L	T	P	C
Course Code:2501IT01	**0**	**0**	**2**	**2**

Course Outcomes:

At the end of the course, student will be able to:

CO1: Utilize Excel and Power BI for data analysis, visualization, and reporting.

CO2: Apply various data analysis techniques in Excel and Power BI to extract meaningful insights from datasets

CO3: Create clear and compelling visualizations using Excel and Power BI to communicate data-driven insights.

CO4: Develop data models in Power BI to organize and analyze data efficiently.

CO5: Design interactive dashboards in Power BI to facilitate data exploration and decision-making.

Mapping of Course Outcomes with Program Outcomes:

CO/PO	PO 1	PO 2	PO 3	PO 4	PO 5	PO 6	PO 7	PO 8	PO 9	PO 10	PO 11
CO1	2	2	-	-	2	-	-	-	1	1	1
CO2	2	3	-	-	2	-	-	-	1	1	2
CO3	2	2	-	-	2	-	-	-	1	1	2
CO4	1	2	1	-	2	-	-	-	1	1	2
CO5	1	2	1	-	2	-	-	-	1	1	2

Practice:

1.Introduction to Excel

a. Overview of Excel and its capabilities for data analysis
b. Basics of Excel: Navigating the interface, entering data, formatting cells
c. Introduction to functions and formulas: SUM, AVERAGE, IF, VLOOKUP, etc.
d. Importing data into Excel from different sources: CSV, text files.

2. Data Analysis with Excel

a. Data manipulation techniques: Sorting, filtering, and grouping data
b. Advanced functions and formulas: INDEX/MATCH, SUMIFS, COUNTIFS, etc.
c. Data visualization with Excel: Creating charts and graphs
d. Using PivotTables for data summarization and analysis

3.Advanced Excel Features

a. Introduction to Excel tables and structured references
b. Working with named ranges and dynamic ranges
c. Excel data validation techniques

4. Introduction to Power BI

a. Overview of Power BI and its advantages over Excel for large datasets
b. Installing Power BI Desktop
c. Understanding the Power BI interface: Navigation, ribbons, and panes
d. Importing data into Power BI Desktop from various sources

5. Data Preparation in Power BI

a. Introduction to Power Query for data transformation
b. Cleaning, shaping, and filtering data in Power Query Editor

6.Data Preparation in Power BI

a. Combining data from different sources
b. Loading data into Power BI model.

7. Data Modeling in Power BI

a. Understanding relationships between tables
b. Creating calculated columns and measures using DAX

8.Data Modeling in Power BI

a. Introduction to DAX functions: CALCULATE, FILTER, RELATED, etc.
b. Working with date and time functions in DAX

9. Visualization Basics in Power BI

a. Creating basic visualizations: Bar charts, line charts, pie charts, etc.
b. Customizing visualizations: Formatting, titles, legends, etc.

10. Visualization Basics in Power BI

a. Using slicers and filters to interact with visualizations
b. Adding drill-down capabilities to visualizations

11. Advanced Visualizations and Dashboards in Power BI

a. Exploring advanced visualizations: TreeMap, Waterfall chart, KPIs, etc.
b. Creating custom visuals from the marketplace

12.Advanced Visualizations and Dashboards in Power BI

a. Designing effective dashboards: Layout, arrangement, and organization
b. Adding interactivity with bookmarks and drill-through

Additional Practice:

1. **Basic Data Analysis:** Import a dataset into Excel and perform basic data analysis tasks such as sorting, filtering, and creating simple charts to visualize the data.
2. **Expense Tracker:** Create a spreadsheet to track your expenses. You can have columns for date, item description, category, and amount. Use formulas to calculate totals and analyze your spending habits.
3. **Data modeling and extracting statistics from dataset:** Connecting Power BI to local data files and cloud servers (COVID19 dataset will be imported into the Power BI for visualization).

Text Books:

1. Learn Power BI - Second Edition: A comprehensive, step-by-step guide for beginners to learn real-world business intelligence 2nd Edition,ISBN: 9781801811958.
2. Power BI Beginner: Zero to Hero in Power BI Desktop by Philip Seamark, ISBN 1691641227.

Reference Books:

1. Power BI Quick Start Guide: Build dashboards and visualizations to make your data come to life by Devin Knight and Siddharth Mehta.
2. Learn Power BI: A Beginner's Guide to Analyzing Data and Creating Reports with Power BI by Murilo Miranda.

Web Links:

1. https://learn.microsoft.com/en-us/power-bi/
2. https://support.microsoft.com/en-us/excel
3. https://cce.sydney.edu.au/course/MSE1
4. https://cce.sydney.edu.au/course/PBBA

Business Intelligence and AI Tools Lab

(Common to CE, EEE, ME, ECE, CSE, AIML, CSE(DS), PT & Min.E)

(Revised Syllabus for batches admitted from 2026 onwards)

Course Code: 2601AI01	**L**	**T**	**P**	**C**
	0	**0**	**2**	**2**

Course Outcomes

At the end of the course, the student will be able to:

CO1	Use Excel for data entry, formulas and built-in functions to perform basic data analysis.
CO2	Apply data-analysis and visualization techniques in Excel (PivotTables, charts) to extract meaningful insights from datasets.
CO3	Build data models and interactive dashboards in Power BI to support reporting and decision-making.
CO4	Use generative AI tools (ChatGPT, Claude, Gemini, Perplexity) through well-structured prompts to solve everyday academic and analytical tasks.
CO5	Apply AI tools responsibly to research, verify, summarize and create content and presentations.

Mapping of Course Outcomes with Program Outcomes:

CO/PO	PO 1	PO 2	PO 3	PO 4	PO 5	PO 6	PO 7	PO 8	PO 9	PO 10	PO 11
CO1	2	2	1	1	3	-	-	-	-	-	1
CO2	2	3	2	2	3	-	-	-	-	1	1
CO3	2	3	3	2	3	-	-	-	1	1	1
CO4	1	2	2	1	3	-	-	-	1	-	2
CO5	1	2	1	1	3	-	-	-	-	2	2

Mapping of Course Outcomes with Program Specific Outcomes:

CO/PSO	PSO1	PSO2
CO1		
CO2		
CO3		
CO4		
CO5		

MODULE A — Spreadsheet Analytics with Microsoft Excel

1. Excel Fundamentals

a. Navigating the Excel interface; entering and formatting data; cell referencing (relative, absolute, mixed).

b. Core functions and formulas: SUM, AVERAGE, COUNT, IF, VLOOKUP.
c. Importing data into Excel from CSV and text files.

2. Data Analysis in Excel

a. Data manipulation: sorting, filtering and grouping data.
b. Advanced functions: INDEX/MATCH, SUMIFS, COUNTIFS, nested IF.
c. Creating charts and graphs to visualize data.

3. PivotTables and Summarization

a. Building PivotTables and PivotCharts for data summarization.
b. Using slicers and timelines to interact with summaries.
c. Calculated fields and grouping within PivotTables.

4. Advanced Excel Features

a. Excel tables and structured references; named and dynamic ranges.
b. Data-validation techniques (drop-down lists, input rules).
c. What-if analysis: Goal Seek and Data Tables.

MODULE B — Business Intelligence with Microsoft Power BI

5. Getting Started with Power BI

a. Overview of Power BI and its advantages over Excel for large datasets.
b. Installing Power BI Desktop; understanding the interface (ribbons, panes, views).
c. Importing data from multiple sources (Excel, CSV, web).

6. Data Preparation with Power Query

a. Cleaning, shaping and filtering data in the Power Query Editor.
b. Combining data from different sources (append and merge).
c. Loading the prepared data into the Power BI model.

7. Data Modeling and DAX

a. Creating relationships between tables; star-schema basics.
b. Calculated columns and measures using DAX.
c. Key DAX functions: CALCULATE, FILTER, RELATED, and date/time functions.

8. Visualizations and Interactive Dashboards

a. Basic and advanced visuals: bar, line, pie, TreeMap, KPI cards.
b. Slicers, filters and drill-down for interactivity.
c. Designing an interactive dashboard with bookmarks and drill-through.

MODULE C — Working with AI Tools

9. Exploring the AI Tool Landscape

a. Introduction to popular AI assistants: ChatGPT, Claude, Gemini, Perplexity.
b. Comparing tools across tasks — summarizing, simple coding, and reasoning.
c. Building a comparison matrix and choosing the right tool for a task.

10. Prompt Engineering Essentials

a. Anatomy of a good prompt; clarity, context and constraints.
b. Prompt patterns: persona, few-shot, chain-of-thought, and structured (JSON) output.

c. Iterating and refining prompts for better results.

11. AI for Coding, Research and Verification

a. AI coding assistants — code generation, explanation, and debugging support for simple programs.
b. Using AI for topic research, explanations and quick literature scans.
c. Three-step verification chain: cross-check claims against primary sources.
d. Recognizing hallucinations, bias and link-rot; the limits of AI.

12. Responsible and Ethical Use of AI

a. Academic integrity, plagiarism and proper acknowledgement of AI use.
b. Privacy, data safety and never sharing sensitive information.
c. Academic integrity and appropriate citation of AI assistance in coursework and submissions.
d. Data privacy and security considerations, including obligations under India's Digital Personal Data Protection Act, 2023 (DPDP Act), when uploading personal or institutional data.
e. Drafting a simple personal/class "AI use policy".

13. AI for Content and Presentations

a. Summarizing documents and Q&A over your own notes (e.g., NotebookLM).
b. Generating outlines, write-ups and email drafts with AI assistance.
c. AI tools for scheduling, note-taking, and meeting/lecture summarization.
d. Auto-creating slide decks from a brief (e.g., Gamma) and refining them.

14. AI-Assisted Data Analysis

a. Using AI to write/explain Excel formulas and draft DAX measures.
b. Cleaning and interpreting a dataset and explaining charts with AI help.

Cornerstone projects :

S. No	Project Title	Project Description	Dataset URL
1	**Indian General Election Analytics Dashboard**	Develop an interactive dashboard to analyze election results across all Indian states and union territories. The project includes Spreadsheet Analytics using Microsoft Excel, Business Intelligence using Microsoft Power BI, and AI insights to visualize ruling parties, constituencies won, vote share, voter turnout, alliance performance, and state-wise electoral trends through interactive reports and maps.	https://results.eci.gov.in/

2	**Global Renewable Energy Analytics Dashboard**	Design a Business Intelligence dashboard to analyze renewable energy production across countries. The project focuses on energy generation by source, installed capacity, consumption patterns, and sustainability trends using Excel, Power BI dashboards, and AI-driven insights for comparative analysis.	https://ourworldindata.org/energy
3	**Air Quality Index (AQI) Analytics Dashboard**	Build an interactive dashboard to monitor air pollution levels across cities and regions. Analyze AQI values, pollutant concentrations (PM2.5, PM10, NO_2, SO_2), seasonal trends, and pollution hotspots using Excel, Power BI visualizations, and AI-powered insights.	https://www.kaggle.com/datasets/rohanrao/air-quality-data-in-india
4	**FIFA World Cup Analytics Dashboard**	Create a comprehensive dashboard to analyze FIFA World Cup tournaments by exploring team performance, match results, goals scored, player statistics, venues, and championship history. The project utilizes Excel, Power BI, and AI insights to identify historical trends and performance patterns.	https://www.kaggle.com/datasets/abecklas/fifa-world-cup
5	**Global Earthquake Analytics Dashboard**	Develop a dashboard that visualizes earthquake occurrences worldwide by analyzing magnitude, depth, geographic location, frequency, and affected regions. Excel is used for data preparation, while Power BI and AI insights help identify seismic trends and risk-prone areas.	https://earthquake.usgs.gov/earthquakes/feed/v1.0/csv.php
6	**Flight Delay Analytics Dashboard**	Design an interactive airline performance dashboard to evaluate flight delays, cancellations, airline efficiency, airport performance, and seasonal travel trends. The project combines Excel, Power BI, and AI insights to support operational analysis and decision-making.	https://www.kaggle.com/datasets/usdot/flight-delays

7	**Global CO_2 Emissions Analytics Dashboard**	Analyze global carbon dioxide emissions by country, region, and industry using Power BI. The dashboard presents emission trends, sector-wise contributions, historical comparisons, and sustainability indicators through Excel, interactive visualizations, and AI-generated insights.	https://ourworldindata.org/co2-and-greenhouse-gas-emissions
8	**Olympics Performance Analytics Dashboard**	Create a Power BI dashboard to evaluate Olympic Games performance by analyzing medal counts, athlete achievements, country rankings, sports categories, and historical participation. Excel and AI-powered visualizations are used to generate meaningful sports analytics and comparative insights.	https://www.kaggle.com/datasets/the-guardian/olympic-games
9	**Netflix Content Analytics Dashboard**	Develop an interactive dashboard to analyze Netflix's content library by genre, country, release year, ratings, duration, and content trends. Excel is used for preprocessing, while Power BI and AI insights help identify viewing patterns and content distribution across regions.	https://www.kaggle.com/datasets/shivamb/netflix-shows
10	**Global Education Statistics Dashboard**	Build a Business Intelligence dashboard to analyze global education indicators such as literacy rates, school enrollment, graduation rates, education expenditure, and gender parity. Using Excel, Power BI, and AI insights, the dashboard supports comparative analysis of educational development across countries.	https://data.worldbank.org/topic/education
11	**Global Food Production Analytics Dashboard**	Develop an interactive dashboard to analyze global food production, crop yields, agricultural output, and production trends across countries. The project incorporates Spreadsheet Analytics using Microsoft Excel, Business Intelligence using Microsoft Power BI, and AI-powered insights to identify production patterns, top-producing countries, and long-term	https://ourworldindata.org/food-supply

		agricultural trends through interactive visualizations.	
12	**Road Traffic Fatalities Analytics Dashboard**	Design a Business Intelligence dashboard to analyze road traffic accidents and fatalities across countries. The dashboard visualizes accident rates, fatalities by road users, regional comparisons, and yearly trends using Microsoft Excel, Power BI, and AI insights to support road safety analysis and policy evaluation.	https://www.kaggle.com/datasets/data125661/india-road-accident-dataset

13	**Global Population Demographics Dashboard**	Build a comprehensive dashboard to analyze population growth, age distribution, urbanization, life expectancy, fertility rates, and demographic changes across countries. The project uses Excel for data preparation, Power BI for visualization, and AI insights to identify demographic trends and support population-based decision-making.	https://ourworldindata.org/population
14	**International Tourism Analytics Dashboard**	Create an interactive dashboard to evaluate global tourism trends by analyzing international tourist arrivals, tourism receipts, popular destinations, and regional tourism growth. Using Microsoft Excel, Power BI, and AI-driven insights, the dashboard enables comparative analysis of tourism performance across countries and years.	https://data.worldbank.org/indicator/ST.INT.ARVL
15	**Global Internet Usage & Digital Connectivity Dashboard**	Develop a Business Intelligence dashboard that analyzes internet penetration, broadband subscriptions, mobile connectivity, and digital	https://data.worldbank.org/indicator/IT.NET.USER.ZS

		adoption across countries. The project combines Spreadsheet Analytics in Microsoft Excel, interactive Power BI dashboards, and AI-generated insights to explore global digital transformation and connectivity trends.	

Text Books

1	Learn Power BI – Second Edition: A comprehensive, step-by-step guide for beginners to learn real-world business intelligence, ISBN: 9781801811958.
2	Power BI Beginner: Zero to Hero in Power BI Desktop, Philip Seamark, ISBN: 1691641227.
3	Excel 2021 / Microsoft 365 – The Step-by-Step Guide to Mastering Excel, (latest edition).

Reference Books

1	Power BI Quick Start Guide: Build dashboards and visualizations to make your data come to life, Devin Knight and Siddharth Mehta.
2	Learn Power BI: A Beginner's Guide to Analyzing Data and Creating Reports with Power BI, Murilo Miranda.
3	Co-Intelligence: Living and Working with AI, Ethan Mollick (for responsible AI use).

Web Links / e-Resources

1	https://learn.microsoft.com/en-us/power-bi/
2	https://support.microsoft.com/en-us/excel
3	https://aistudio.google.com/
4	https://notebooklm.google.com/
5	https://www.perplexity.ai/

Note:

- The cornerstone project team size shall be four (4) students.
- Students may select any one of the above prescribed projects or a project of their own choice with the prior permission of the Course instructor.
- The evaluation of the Cornerstone Project shall be based on the project implementation, oral presentation, 10-minute video presentation, report and viva voce.

- The video presentation should consist of the working procedure of the project along with contribution of each student for a minimum of 2 minutes.
- Finally, the Source code of the cornerstone Project has to be pushed into the Students GitHub repository (if applicable).

Engineering Graphics

(Common to CE, EEE, ME, ECE, CSE, IT, AIML, CSE(DS), PT & Min.E)

	L	T	P	C
Course Code: 2501ME01	**1**	**0**	**2**	**3**

Course Outcomes:

At the end of the course, student will be able to:

CO1: Apply the principles of engineering drawing to construct Engineering curves.
CO2: Construct projections ofpoints and lines.
CO3: Demonstrate visualization skills of projections of planes.
CO4: Demonstrate visualization skills of projections of solids and development of surfaces.
CO5: Construct isometric and orthographic views of simple solids.

Mapping of Course Outcomes with Program Outcomes:

CO/PO	PO 1	PO 2	PO 3	PO 4	PO 5	PO 6	PO 7	PO 8	PO 9	PO 10	PO 11
CO1	3	2	1	-	2	-	-	1	1	-	-
CO2	3	2	1	-	2	-	-	1	1	-	-
CO3	3	2	1	-	2	-	-	1	1	-	-
CO4	3	2	1	-	2	-	-	1	1	-	-
CO5	3	2	1	-	2	-	-	1	1	-	-

Practice:

1. **Introduction to Engineering Graphics**
   Introduction to AutoCAD, Dimensioning, elements of dimensioning, system of dimensioning, and Conventions in Drawing.

2. **Construction of Cycloids and Involutes**
   a) Construction of Cycloid, Epicycloid and Hypocycloid
   b) Involute of a pentagon and circle

3. **Introduction to Orthographic Projection**
   a) Principles of Projection
   b) Orthographic Projection – Four Quadrants.
   c) First angle & Third angle Projection with examples, reference plane, importance of reference lines or Plane.
   d) Projections of a point situated in any one of the four quadrants.

4. **Projection of straight lines-I:**
   a) Projections of straight lines parallel to both reference planes.
   b) Projections of straight lines perpendicular to one reference plane and parallel to other reference plane
   c) Projections of straight line parallel to one plane & inclined to another plane

5. **Projection of straight lines-II:**
   a) Projections of straight line inclined to both reference planes

6. **Projection of planes:**
   a) Regular planes perpendicular to both reference planes, Parallel to one reference plane and inclined to the other reference plane

   Ex: Rectangle, Pentagon, Hexagon and Rhombus

7. **Projection of planes**
   a) Projections of Planes inclined to both reference planes Ex: Rectangle, Pentagon, Hexagon and Rhombus.

8. **Projection of solids**
   a) Axis Perpendicular to H.P and Axis Perpendicular to V.P

   Ex: Pentagonal and Hexagonal Prisms, Pyramids, Cylinder and Cone
   b) Axis Parallel to H.P and V.P

   Pentagonal and Hexagonal Prisms, Pyramids, Cylinder and Cone

9. **Projection of solids**
   a) Projection of Solids with axis inclined to one reference plane and parallel to another plane

   Ex: Pentagonal and Hexagonal Prisms, Pyramids, Cylinder and Cone

10. **Development of Surfaces**
    a) Development of Prisms and Cylinder simple cases

11. **Development of Surfaces**
    a) Development of Pyramids and Cone simple cases

12. **Conversion of Isometric views to Orthographic views**
    a) Practice figure - 1
    b) Practice figure – 2

Additional Practice:

1. **Conversion of Isometric views to Orthographic views**
   a) Practice figure - 3
   b) Practice figure – 4
2. **Conversion of Orthographic views to Isometric views**
   a) Practice figure - 1
   b) Practice figure - 2

Text Books:

1. Engineering Drawing, N. D. Bhatt, Charotar Publishing House, 54th Edition, 2024, ISBN : 9789385039706.
2. Engineering Drawing and Graphics , Venugopal, New Age Publications, 2nd Edition, 2019, ISBN: 9788122415452.

Reference Books:

1. Engineering Drawing, K.L. Narayana and P. Kannaiah, Tata McGraw Hill, 2021,ISBN: 978-9385983177.
2. Computer Aided Engineering Graphics, T. Jeyapoovan,Vikas Publishing house, New Delhi, 1st Edition, 2023, ISBN : 9789356743199.

Web Links:

1. https://nptel.ac.in/courses/112103019/
2. https://academy.autodesk.com/authenticated-home-user
3. https://www.sciencedirect.com/book/9780080108391

Engineering Workshop

(Common to CE, EEE, ME, ECE, PT & Min.E)

	L	T	P	C
Course Code:2501ME03	**0**	**0**	**1**	**1**

Course Outcome:

At the end of the course, student will be able to:

CO1: Prepare various wooden joints.
CO2: Demonstrate various sheet metal models.
CO3: Develop the basic knowledge of house wiring.
CO4: Develop the basic knowledge of plumbing.
CO5: Practice various welded joints.

Mapping of Course Outcomes with Program Outcomes:

CO/PO	PO 1	PO 2	PO 3	PO 4	PO 5	PO 6	PO 7	PO 8	PO 9	PO 10	PO 11
CO1	1	1	-	-	-	1	1	2	1	-	1
CO2	1	1	-	-	-	1	1	2	1	-	1
CO3	2	2	-	-	-	1	1	2	1	-	1
CO4	1	2	-	-	-	1	1	2	1	-	1
CO5	2	2	-	-	-	1	1	2	1	-	1

Practice:

1. To make a T-Lap joint from the given wooden workpieces.
2. To make a dovetail lap joint from the given wooden workpieces.
3. To make a taper tray using the given sheet metal.
4. To make a funnel using the given sheet metal.
5. To make a square tin using the given sheet metal.
6. To connect three bulbs by using series and parallel connections.
7. To give connection to a bulb by using staircase wiring.
8. To prepare wiring for a tube light with switch control.
9. To prepare a PVC pipe joint by using the given circuit1.
10. To prepare a PVC pipe joint by using the given circuit2.
11. To make a butt joint using the given M.S pieces by arc welding.
12. To make a lap joint using given M.S pieces by arc welding

Additional Practice:

1. To make a crosslap joint from the given wooden workpieces.
2. To make an open scoop using the given sheet metal.
3. To make a T-joint using given M.S pieces by arc welding.

Text Books:

1. Work shop Manual, P.Kannaiah & K.L.Narayana/ SciTech Publishers, 2nd Edition, ISBN: 978-8183711302.
2. Elements of Workshop Technology, VolI by S.K. Hajra Choudhury, S.K. Hajra. Choudhury & Nirjhar Roy, Media Promoters and Publishers PvtL imited, 14th Edition, ISBN: 8185099146.

Reference Books:

1. Workshop Technology, Part 1, W.A.J. Chapman, 5th Edition, ISBN 9780415503020.
2. Engineering Practices Lab Manual, T. Jeyapoovan& M. Saravanapandian, Vikas Publishing House Pvt Limited, 4th Edition, ISBN: 8125929037.
3. Engineering Practices Laboratory Manual, Ramesh Babu.V., VRB Publishers Private Limited, Chennai, Revised Edition, 2019-20, ISBN: 978-81-935993-8.

Web Links:

1. https://bharatskills.gov.in
2. https://www.gopracticals.com/basic-engineering/workshop/

Basic Electrical & Electronics Engineering

(Common to CE, ME, ECE, CSE, IT, AIML, CSE(DS), PT & Min.E)

	L	T	P	C
Course Code:2501EE01	**2**	**0**	**2**	**4**

Course Outcomes:

At the end of the course, student will be able to:

CO 1: Analyze the concepts associated to AC and DC circuits.

CO 2: Explain the operating principles of motors, generators and measuring instruments.

CO 3: Analyze the Different Energy Resources and Equipment Safety Measures.

CO 4: Explain the concept and the applications of semiconductor Diodes.

CO 5: Analyze the Basic Electronic Circuits and interpret numeric information in different code formats.

Mapping of course outcomes with program outcomes:

CO\PO	PO1	PO2	PO3	PO4	PO5	PO6	PO7	PO8	PO9	PO10	PO11
CO1	2	3	1	-	1	-	-	-	2	2	-
CO2	2	3	1	-	-	-	-	-	2	2	-
CO3	3	2	1	-	-	-	-	-	2	2	-
CO4	3	2	1	-	-	-	-	-	2	2	-
CO5	3	2	1	-	-	-	-	-	2	2	-

Mapping of course outcomes with program Specific Outcomes:

CO\PSO	PSO1	PSO2
CO1	**1**	-
CO2	**1**	-
CO3	**1**	-
CO4	**1**	-
CO5	**1**	-

UNIT-I

DC and AC Circuits:

DC circuits: Ohm's and Kirchhoff's laws, analysis of series, parallel and series-parallel circuits excited by independent voltage sources for R, L, C parameters, current division, voltage division

AC circuits: Generation of sinusoidal voltage, frequency of generated voltage, average value, RMS value, form, and peak factors. Real power, reactive power, apparent power, and Power factor.

Practice:

1. Verification of Ohm's Law.
2. Verification of KCL and KVL.
3. Verification of KCL, KVL and ohm's law using simulation.

UNIT-II

Machines and Measuring Instruments: Principles and operation of DC machines, Transformers – Synchronous Machines - three Phase and single phase induction motors - Moving coil and moving iron instruments, Wheatstone bridge and Megger.

Practice:

1. Magnetisation Characteristics of DC shunt generator.
2. Measurement of Power and Power factor using Single-phase wattmeter.
3. Measurement of Resistance using Wheat stone bridge.
4. Measurement of Earth Resistance using Megger.

UNIT-III

Energy Resources, Electricity Bill &Safety Measures

Conventional and non-conventional energy resources; Layout and operation of various Power Generation systems: Hydel, Thermal, Solar &Wind power generation. Calculation of electricity bill for domestic appliances. Working principle of Fuse and Miniature circuit breaker (MCB). Electric Shock, Earthing and its types, Safety Precautions to avoid shock.

Practice:

1. Calculation of Electrical Energy for Domestic Premises.

UNIT-IV

Semiconductor Devices

Intrinsic semiconductors, Extrinsic semiconductors, P type and N type, P-N junction characteristics of P N Junction Diode, Zener Effect, Zener Diode and its Characteristics. working of simple Zener Voltage Regulator and Amplifier. Bipolar Junction Transistor - CB, CE, CC Configurations and Characteristics.

Practice:

1. Sketch the V-I characteristics of PN Junction diode A) Forward bias B) Reverse bias.
2. Sketch the V-I characteristics of Zener Diode and its application as voltage Regulator.
3. Plot Input & Output characteristics of BJT in CE and CB configurations.
4. Obtain Frequency response of CE amplifier.

UNIT-V

Basic Electronic Circuits

Block diagram description of a dc power supply, working of a half and full wave, bridge rectifier, filters.

Digital Electronics

Overview of Number Systems, Logic gates including Universal Gates, BCD codes, Excess-3 code, Gray code, Hamming code. Truth Tables and Functionality of Logic Gates – NOT, OR, AND, NOR, NAND, XOR and XNOR. Simple combinational circuits–Half and Full Adders.

Practice:

1. Implementation of half wave and full wave rectifiers.
2. Design Half Adder and Full Adder circuits.
3. Verification of truth table for Logic gates using ICs.

Text Books:

1. Basic Electrical and Electronics Engineering, Salivahanan, S,Tata McGraw Hill Education (India) Private Limited, New Delhi, ISBN: 9789389691801.
2. Principles of Electrical Engineering, V. K. Mehta, R. Mehta, S. Chand & Company Ltd., New Delhi, ISBN-13: 9788121930888.
3. Digital Fundamentals, Thomas Floyd, Prentice Hall, 10thEdition, ISBN: 9780132737968.

Reference Books:

1. Electronic Devices & Circuit Theory, Robert L. Boylestad and Louis Nashelsky, Pearson, 11thEdition, ISBN: 9780135026496.
2. Power System Engineering, P.V. Gupta, M.L. Soni, U.S. Bhatnagar and A. Chakrabarti, Dhanpat Rai & Co, ISBN: 9788177000207.

Web Links:

1. https://nptel.ac.in/courses/108/101/108101091/ (NPTEL Video by Dr.Mahesh B. Patil from IIT Bombay)
2. https://nptel.ac.in/courses/117/106/117106108/ (NPTEL Video by Prof. Nagendra Krishnapura from IITMadras)

Network Analysis

	L	T	P	C
Course Code:2501EC02	**3**	**1**	**0**	**4**

Course Outcomes:

At the end of the course student will be able to:

CO1: Apply mesh and nodal analysis to DC and AC circuits.
CO2: Analyze the circuit using network theorems.
CO3: Analyze transient behaviour of RL,RC and RLC circuits with DC excitation.
CO4: Outline the characteristics of resonant circuits.
CO5: Model a two port network in terms of Z, Y, h & T parameters.

Mapping of Course Outcomes with Program Outcomes:

CO/PO	PO 1	PO 2	PO 3	PO 4	PO 5	PO 6	PO 7	PO 8	PO 9	PO 10	PO 11
CO1	2	3	2	-	-	-	-	-	-	-	1
CO2	3	2	2	-	-	-	-	-	-	-	1
CO3	2	3	2	-	-	-	-	-	-	-	1
CO4	3	2	2	-	-	-	-	-	-	-	1
CO5	2	3	2	-	-	-	-	-	-	-	1

Mapping of Course Outcomes with Program Specific Outcomes:

CO/PSO	PSO1	PSO2
CO1	1	-
CO2	1	-
CO3	1	-
CO4	2	-
CO5	-	2

UNIT – I

D.C.Circuits: Types of circuit elements, Types of Sources and Source Transformation, Mesh analysis and Nodal analysis, problem solving with resistances only including dependent sources also, principle of Duality with examples.

Steady State Analysis of A.C Circuits: Impedance concept, phase angle and phasor notation for series R-L, R-C, and R-L-C circuits, mesh and nodal analysis,Star-Delta conversion, problem solving.

UNIT – II

Network Theorems: Superposition theorem, Thevenin‘s theorem, Norton‘s theorem, Maximum power transfer theorem, Millman’s theorem, Reciprocity theorem, Tellegen‘s theorem, Miller’s theorem.

UNIT – III

Transient Analysis: Introduction, Initial & Final conditions for basic passive elements, Transient response of Source free series RL and RC circuits, Transient response of series RL and RC circuits for DC excitation, Transient response of series RLC circuits for DC excitation.

UNIT – IV

Resonance: Introduction, Series resonance -Impedance, Resonant frequency, Quality factor, Bandwidth, Parallel resonance-Condition for maximum impedance, Current, Bandwidth, and General case resistance present in both branches.

UNIT – V

Two-Port Networks: Introduction to two port networks, Z-parameters, Y-parameters, ABCD-parameters, h-parameters, Reciprocity and Symmetry in two port network, Relationship between Parameters, Interconnection of two port networks.

Text Books:

1. Engineering Circuit Analysis by William H. Hayt, Jack Kemmerly, Jamie Phillips, Steven M. Durbin, 9th Edition, 2020, ISBN:978-9390185139.
2. Joseph Edminister and Mahmood Nahvi, Electric Circuits, Schaum's Outline Series, Tata McGraw Hill Publishing Company, New Delhi, 7th Edition, ISBN: 978-1260011968.

Reference Books:

1. Network Analysis – ME Van Valkenburg, Prentice Hall of India, revised 3rd Edition, 2019, ISBN: 978-9353433123.
2. Fundamentals of Electric Circuits by Charles K. Alexander and Matthew N. O. Sadiku, McGraw-Hill Education, 7thEdition, 2022, ISBN:978-9355320162.

Web Links:

1. https://www.falstad.com
2. https://ocw.mit.edu/high-school/physics/exam-prep/electric-circuits/
3. www.allaboutcircuits.com
4. https://nptel.ac.in/courses/117106108/ Prof. Gajendranath Chowdary /IIT Madras.
5. https://asnm-iitkgp.vlabs.ac.in/List%20of%20experiments.html

Digital Electronics

	L	T	P	C
Course Code: 2501EC15	**2**	**0**	**2**	**4**

Course Outcomes: At the end of the Course, Students will be able to:

CO1: Interpret Boolean theorems and De Morgan's laws.
CO2: Minimize Boolean expressions using algebraic, Karnaugh Map, and tabular techniques.
CO3: Implement various combinational logic circuits.
CO4: Design, analyse, and implement sequential logic circuits using flip-flops and registers.
CO5: Design and implement counters and finite state machines using Mealy and Moore models.

Mapping of Course Outcomes with Program Outcomes:

CO/PO	PO1	PO2	PO3	PO4	PO5	PO6	PO7	PO8	PO9	PO10	PO11
CO1	3	2			2			2	1		1
CO2	2	2			2			2	1		1
CO3	2	2	3	1				2	1		1
CO4	2	2	3	1				2	1		1
CO5	2	2	3	1	2			2	1		1

Mapping of Course Outcomes with Program Specific Outcomes:

CO/PSO	PSO1	PSO2
CO1		2
CO2		2
CO3		3
CO4		3
CO5		3

UNIT – I

Boolean Algebra: Boolean theorems, principle of duality and complementation, De-Morgan's theorems, Review of basic logic gates, Basic logic gate realization and Boolean function realization using universal gates (NAND, NOR).

Practice:

1. Implement logic gate circuits (NOT, NAND, and NOR) using Verilog and verify their functionality through FPGA Kit using Simulation tools Such as Xilinx Vivado or Intel Quartus Prime.
2. Apply De Morgan's laws for Boolean expression, $F = \overline{(AB + C)}$ and realize it using NAND/NOR gates in Verilog, and verify their functionality through FPGA Kit using Simulation tools Such as Xilinx Vivado or Intel Quartus Prime.

UNIT – II

Minimization Techniques: Minimization of logic functions using Boolean theorems, minimization of switching functions using Karnaugh Maps (K-Maps) up to 5 variables, Don't-care conditions in practical designs, tabular minimization (Quine-McCluskey).

Practice:

1. Minimize a Boolean function $F(A,B,C,D) = \sum m(0,2,5,7,8,10,13,15)$ and Implement the minimized expressions in Verilog, and verify functionality through simulation in Xilinx Vivado or Intel Quartus Prime.
2. Minimize the Boolean function with don't-care conditions $F(A,B,C,D) = \sum m(1,3,7,11,15) + d(0,2,5)$ using K-map. Implement the minimized expression in Verilog and verify its functionality through simulation in Xilinx Vivado or Intel Quartus Prime.

UNIT – III

Combinational Logic Circuits: Review of Adders, Half Subtractor, Full Subtractor, 4-bit Ripple Carry Adder, 4-bit Carry Look-Ahead Adder circuit, 4-bit binary Adder/Subtractor circuit, BCD adder, Decoders (up to 3-to-8), Encoders (up to 8-to-3), Multiplexers (up to 8:1), De-multiplexers (up to 1:8), 1-bit Comparator, Code converters (Binary to Gray and Gray to Binary), and realization of Boolean functions using Decoders & Multiplexers.

Practice:

1. Implement 3x8 Decoder Circuit using digital ICs.
2. Implement 8:1 Multiplexer using digital ICs.

UNIT – IV

Sequential Circuits I: Latches and Flip-Flops (SR, JK, D, T), Truth tables and excitation tables, Flip-Flops with Preset and Clear, Flip-flop conversion, 4-bit Shift Register (SISO, SIPO, PISO, PIPO), 4-bit Bi-directional Shift Register, 4-bit Universal Shift Register.

Practice:

1. Implement SR, JK, D, and T-Flip-flop using digital ICs.
2. Implement 4-bit Universal Shift Register using digital ICs.

UNIT – V

Sequential Circuits II: 4-bit Ripple Counter (Asynchronous), 4-bit Synchronous Binary Counter, Mod-10 (Decade) Counter, 4-bit Johnson Counter, 4-bit Ring Counter, Finite State Machines (FSM), capabilities and limitations, Mealy and Moore models, State diagram, state table, state assignment.

Practice:

1. Implement 3-bit Asynchronous Counter using digital IC trainer kit.
2. Design a Mealy sequence detector for the input sequence "1011" (overlapping allowed).
   - Draw state diagram and state table.

- Perform state assignment.
- Implement using Verilog and verify using simulation in Xilinx Vivado or Intel Quartus Prime.

3. Design a Moore sequence detector for the input sequence "1101" (overlapping allowed).
   - Draw state diagram and state table.
   - Compare number of states with Mealy implementation.
   - Implement using Verilog and verify functionality through simulation in Xilinx Vivid or Intel Quartus Prime.

Text Books:

1. **Digital Design** – M. Morris Mano, Michael D. Ciletti, 6th Edition, Pearson Education, 2018, ISBN: 978-0134549897.
2. **Switching & Finite Automata Theory**, Zvi Kohavi, 3rd Edition, McGraw-Hill (TMH), ISBN: 9780074514863.
3. **Switching and Logic Design**, C. V. S. Rao, Pearson, 2017, **ISBN: 9788131701836.**

Reference Books:

1. **Fundamentals of Logic Design**, Charles H. Roth, Larry L. Kinney, 7th Edition, Cengage Learning, ISBN: 9781133628477.
2. **A Verilog HDL Primer, J. Bhasker, 3rd Edition, BS Publications, 2018, ISBN: 9788178001425.**
3. **Introduction to Switching Theory and Logic Design**, F. J. Hill and G. R. Peterson 4th Edition, Wiley.
4. **Digital Logic: Applications and Design,** John M. Yarbrough, 1st Edition, Thomson.
5. **Digital Fundamentals,** Thomas L. Floyd, 11th Edition, Pearson, ISBN: 9780132737968.
6. **FPGA Prototyping by Verilog Examples, Pong P. Chu, 2nd Edition, Wiley, ISBN: 9781119282662.**

Web Links:

Tutorials & Learning**:**

1. **NPTEL – Digital Circuits and Systems**
   https://nptel.ac.in/courses/108/105/108105103/.
2. **MIT OpenCourseWare – Digital Circuits**
   https://ocw.mit.edu/courses/6-111-introduction-to-digital-systems-spring-2018/.
3. **GeeksforGeeks – Digital Logic Design**
   https://www.geeksforgeeks.org/digital-logic-design/.
4. **TutorialsPoint – Digital Logic Design**
   https://www.tutorialspoint.com/digital_electronics/digital_electronics_logic_gates.htm.

Simulation & Verification**:**

1. **ChipVerify – Verilog Quick Reference & Examples**
   https://www.chipverify.com/verilog/verilog_quick_ref.

Synthesis & FPGA Tools**:**

1. **Xilinx Vivado Design Suite Documentation**
   https://www.xilinx.com/support/documentation/sw_manuals.html.
2. **Intel (Altera) Quartus Prime Resources**
   https://www.intel.com/content/www/us/en/programmable/support/support-resources/design-software.html.

Electronic Devices & Circuits

	L	T	P	C
Course Code: 2501EC03	**2**	**0**	**2**	**4**

Course Outcomes:

At the end of the course, student will be able to:

CO1: Interpret the characteristics of semiconductor diodes.
CO2: Compare the characteristics of rectifiers with and without filters.
CO3: Explain the characteristics of BJT and FET in different configurations.
CO4: Apply biasing methods for stabilization of BJT and FET amplifiers.
CO5: Construct a small signal low frequency equivalent model of BJT and FET.

Mapping of Course Outcomes with Program Outcomes:

CO/PO	PO 1	PO 2	PO 3	PO 4	PO 5	PO 6	PO 7	PO 8	PO 9	PO 10	PO 11
CO1	3	2	-	-	-	-	-	2	1	-	1
CO2	3	2	-	1	-	-	-	2	1	-	1
CO3	3	2	-	-	-	-	-	2	1	-	1
CO4	2	2	-	2	-	-	-	2	1	-	1
CO5	2	3	1	2	-	-	-	2	1	-	1

Mapping of Course Outcomes with Program Specific Outcomes:

CO/PSO	PSO1	PSO2
CO1	-	3
CO2	-	3
CO3	-	2
CO4	-	2
CO5	-	2

UNIT – I

Junction Diode Characteristics: Introduction to semiconductors, energy band structure of open circuited PN junction, forward and reverse bias of PN junction, current components in PN junction diode, drift and diffusion currents, law of junction, diode current equation, temperature dependence of V-I characteristics, Breakdown mechanisms, diffusion and transition capacitances.

Special Semiconductor Devices: LED, Photo diode, Tunnel Diode, Varactor Diode and UJT.

Practice:

1. V-I characteristics of LED and Varactor Diode.
2. Draw the V-I characteristics of UJT and Identify the negative resistance region.

UNIT – II

Diode applications: Types of rectifiers and their operation, input and output waveforms, derivations of parameters of rectifiers. Filters: Inductor filter, Capacitor filter, L-section filter, π-section filter, multiple L-section and multiple π- section filters, clipper and clamper circuits.

Practice:

1. Non Linear wave shaping – Series Clippers.
2. Non Linear wave shaping – Clampers.
3. Measure the Ripple factorand Percentage of Regulationof Full Wave Rectifierwith and without π filter.

UNIT – III

Transistor Characteristics: BJT: Construction and operation of a transistor, transistor current components, transistor current equation, transistor as a switch and amplifier, characteristics of transistor in Common Base, Common Emitter and Common Collector configurations, transistor parameters, relation between and , comparison of BJT transistor configurations. FET: Construction, operation, characteristics and parameters of JFET, depletion and enhancement mode MOSFETs, comparison between JFET and MOSFET.

Practice:

1. Transistor as a switch.
2. Obtain the Drain and Transfer Characteristics of FET-CS Configuration also find μ, gm and rd.
3. Plot the output and transfer characteristics of an N-channel Enhancement Mode MOSFET. And obtain the threshold voltage V_{th} beyond which conduction starts.

UNIT – IV

Transistor Biasing and Thermal Stabilization: Need for biasing, load line analysis, basic stability and stability factors (S, S', S''), BJT biasing methods, fixed bias, collector to base bias, self-bias, Stabilization against variations in VBE, Ic0 and β, Bias compensation, FET voltage divider biasing method.MOSFET Voltage divider biasing method.

Practice:

1. Transistor biasing- Design of self-bias circuit
2. Design a voltage divider bias circuit for an n-channel enhancement MOSFET. And establish a stable operating point (Q-point) with proper gate voltage (V_{gs}) and drain current (I_d).

UNIT – V

Small Signal Analysis of Transistor Amplifiers at Low Frequency: Transistor as a two-port network, Transistor hybrid model, determination of h-parameters, generalized analysis of transistor amplifier model using h-parameters, Analysis of CB, CE and CC amplifiers using exact and approximate analysis.

FET: Generalized analysis of small signal model, Analysis of CG, CS and CD amplifiers.

Practice:

1. Obtain the frequency response of CC amplifier using BJT.
2. Obtain the frequency response of CS Amplifier using FET.

Additional Practice:

1. Implementation of half wave and full wave rectifiers with π filter.
2. Determine the Q point of given voltage divider bias circuit.
3. Non Linear wave shaping – Shunt Clippers with reference voltage.
4. Non Linear wave shaping – Double ended Clipping with reference voltage.

Capstone project:

"*Design and Development of a Mobile Phone Charger Circuit using Full-Wave Rectifier and π-Section Filter with Overvoltage Clipping Protection*".

This project involves designing a DC power supply circuit suitable for mobile phone charging by implementing a full-wave bridge rectifier, followed by a π-section filter for ripple reduction. The circuit will include a voltage clipper stage to protect against overvoltage conditions. The output will be tested for voltage regulation, ripple factor, and charging compatibility with USB-powered mobile devices.

Text Books:

1. Electronic Devices and Circuits, J. Millman, Christos C. Halkias, Satyabrata Jit, Tata McGraw Hill, 4th Edition, ISBN: 978-9339219543.
2. Electronic Devices and Circuits, David A. Bell, Oxford University Press, 5th Edition, 2018, ISBN: 978-0195693409 .

Reference Books:

1. Electronic Devices and Circuits, R.L. Boylestad and Louis Nashelsky, Pearson Publications, 10th Edition,2020, ISBN: 9788131727003.
2. Electronic Devices and Circuits, GK Mithal, Khannan Publishers, 23rd Edition, ISBN:978-8174091772.
3. Electronic Circuits, D. A. Neamen, Tata McGraw Hill Education, ISBN: 978-0070634336 .

Web Links:

1. https://www.electronics-tutorials.ws/diode/diode_2.html
2. http://fourier.eng.hmc.edu/e84/lectures/ch4/node3.html
3. http://nptel.ac.in/courses/117103063/11
4. https://nptel.ac.in/courses/122106025/ by Prof. T. S. Natarajan, IIT Madras .
5. https://www.circuitlab.com/editor/#?id=6syafk
6. https://www.falstad.com/circuit/circuitjs.html

Random Variables & Stochastic Processes

	L	T	P	C
Course Code:2501EC04	**3**	**1**	**0**	**4**

Course Outcomes:

At the end of the course, student will be able to:

CO1: Summarize the properties of single Random variables
CO2: Infer the characteristics of multiple random variables.
CO3: Interpret the characteristics of random process in time domain.
CO4: Interpret the characteristics of random process in frequency domain.
CO5: Summarize the types and characteristics of Noise

Mapping of Course Outcomes with Program Outcomes:

CO/PO	PO 1	PO 2	PO 3	PO 4	PO 5	PO 6	PO 7	PO 8	PO 9	PO 10	PO 11
CO1	3	2	-	-	-	-	-	-	-	-	1
CO2	3	2	-	-	-	-	-	-	-	-	1
CO3	3	2	-	-	-	-	-	-	-	-	1
CO4	3	2	-	-	-	-	-	-	-	-	1
CO5	2	2	-	-	-	-	-	-	-	-	1

Mapping of Course Outcomes with Program Specific Outcomes:

CO/PSO	PSO1	PSO2
CO1	2	-
CO2	2	-
CO3	2	-
CO4	2	-
CO5	2	-

UNIT – I

Single Random Variable: Definition, Discrete and Continuous Random variables, Distribution and density function of Random variable and their properties , Expected value of Function of random variable, Moments, Mean and Variance and their properties, Binomial, Poisson, Uniform, Exponential, Gaussian distributions, Transformation of random variable.

UNIT – II

Multiple Random Variables: Joint Distribution and density function of multiple random variables, Joint Moments,Marginal and conditional distributions, Covariance, Correlation , Sum of independent random variables, Central limit theorem, Statistical Independence of Random Variables.

UNIT – III

Random Processes-Temporal characteristics: Random Process- Definition, Types of Random Processes, First-Order,Second-order, Strict Sense Stationary Random Process, Wide sense stationary and Ergodic processes, Autocorrelation Function and its Properties, Cross-Correlation Function and its Properties, Covariance Functions, Random Signal Response of Linear Systems: Linear Time Invariant System,System Response – Convolution, Mean and Mean-squared Value of System Response.

UNIT – IV

Random Processes – Spectral Characteristics: The Power Spectrum: Properties, Relationship between Power Spectrum and Autocorrelation Function, The Cross-Power Density Spectrum, Properties, Relationship between Cross-Power Spectrum and Cross-Correlation Function.

UNIT – V

Noise Sources: Definitions, Resistive/Thermal Noise Source, Arbitrary Noise Sources, Effective Noise Temperature, Noise equivalent bandwidth, Average Noise Figures, Spectral characteristic of system response for Noise, Narrow Band Noise, Quadrature representation of Narrow Band Noise & its properties.

Text Books:

1. Probability, Random Variables & Random Signal Principles, Peyton Z. Peebles, TMH Publications, 4th Edition, ISBN:978-0-07-047428-4.
2. Probability-Random Variables and Stochastic Processes, Athanasios Papoulis and S. Unnikrisha, PHI Publications, 4th Edition, ISBN:978-0070486584.

Reference Books:

1. Probability Theory and Stochastic Processes, Y. Mallikarjuna Reddy, Universities Press (India) Pvt. Ltd.,4th Edition, ISBN:9788173718878.
2. Probability and Random Processes with Applications to Signal Processing, Henry Stark and John W. Woods, Pearson Education, International Edition, ISBN:9780131784574.

Web Links:

1. http://nptel.ac.in/courses/117105085/ - by Prof.M.Chakraborthy, IIT Khargpur
2. https://ocw.mit.edu/courses/18-445-introduction-to-stochastic-processes-spring-2015/ - Offered by MIT

Signals & Systems

	L	T	P	C
Course Code: 2501EC14	**2**	**1**	**1**	**4**

Course Outcomes:

At the end of the course, student will be able to:

CO1: Analyze the Signal Classification and Fourier series representation of periodic signals.
CO2: Analyze the spectral characteristics of continuous-time periodic and aperiodic signals using Fourier analysis.
CO3: Apply Laplace and Z-transform techniques on signals.
CO4: Utilize the concept of convolution and sampling theorem in signal processing.
CO5: Analyze the response of continuous time LTI system.

Mapping of Course Outcomes with Program Outcomes:

CO/PO	PO 1	PO 2	PO 3	PO 4	PO 5	PO 6	PO 7	PO 8	PO 9	PO 10	PO 11
CO1	3	2	-	-	3	-	-	1	1	-	1
CO2	2	3	-	-	2	-	-	1	1	-	1
CO3	3	2	-	-	2	-	-	1	1	-	1
CO4	2	3	-	-	2	-	-	1	1	-	1
CO5	2	2	-	-	2	-	-	1	1	-	1

Mapping of Course Outcomes with Program Specific Outcomes:

CO/PSO	PSO1	PSO2
CO1	2	-
CO2	2	-
CO3	2	-
CO4	2	-
CO5	2	-

UNIT – I

Signals: Definitions of a signal , Classification of signals, Elementary signals, Basic operations on signals.

Fourier Series: Representation of Fourier series for continuous time periodic signals, Trigonometric and Exponential Fourier series, Symmetry conditions , Dirichlet's conditions, Properties of Fourier series, Complex Fourier spectrum.

Practice :

1. Generation of various signals such as unit impulse, unit step, ramp, exponential and sinewave.

2. Perform Operations on signals such as Addition, Multiplication, Scaling, Shifting, and Folding.
3. Perform Fourier synthesis of square wave.

UNIT – II

Fourier Transform: Deriving Fourier Transform from Fourier series, Fourier Transform of arbitrarysignals, Fourier transform of standard signals, Fourier transform of periodic signals, Properties of Fourier transforms

Practice:

1. Calculate the Fourier Transform and Inverse Fourier Transform of a given continuous time signal.

UNIT – III

Laplace Transform: Bilateral and unilateral Laplace Transforms, Region of convergence and its properties, Constraints on ROC for various classes of continuous time signals, Properties of Laplace Transform, Inverse Laplace Transform.

Z-Transform: Concept of Z- Transform of a Discrete Sequence, Region of convergence in Z-Transform, Constraints on ROC for various classes of discrete time signals, Properties of Z-Transform, Inverse Z-Transform.

Practice:

1. Obtain Laplace Transform and inverse Laplace Transform of a given continuous time signal.
2. Calculate the Z-Transform and Inverse Z-Transform of a given discrete time signal.

UNIT – IV

Convolution of Signals: Convolution and it's properties, Graphical representation of convolution, Convolution of signals through transforms.

Sampling: Introduction to Sampling , Sampling theorem, Nyquist rate, Nyquist duration, Types of Sampling, Reconstruction of signal from its samples, Effect of under sampling,

Practice:

1. Perform convolution of given continuous time signals.
2. Generate oversampled,Nyquist and undersampled discrete time signals for the given Analog signal.

UNIT – V

Signal Transmission Through LTI Systems: Definitions of a system, Classification of Systems, Transfer function of a LTI system, Impulse response and step response of LTI systems, Distortion less transmission through a system, Ideal LPF, HPF,BPF and BSF characteristics, Signal bandwidth, System bandwidth.

Practice:

Obtain Impulse and step response of given LTI system.

Additional Practice:

1. Finding the even and odd parts, real and imaginary parts of signal.
2. Analyze the effect of increasing the number of terms in the Fourier series on the Gibbs phenomenon.
3. Verification of linearity and time invariance properties of a given system.

Capstone project:

1. Spectral Decomposition and Analysis of Complex Signals.

Text Books:

1. Signals & Systems by Simon Haykin and Van Veen, Wiley, 2nd Edition, ISBN:978-8126512652.
2. Signals and Systems by A.V. Oppenheim, A.S. Willsky, and S.H. Nawab, PHI,2nd Edition, Reprint, ISBN:978-7560509709.

Reference Books:

1. Signals, Systems & Communications - B.P. Lathi, BS Publications, ISBN:978-8178000169.
2. Fundamentals of Signals and Systems- Michel J. Robert, MGH International Edition, Reprint, ISBN: 978-0070702219.
3. Signals and Systems – A. Anand Kumar, PHI, 3rd Edition, 2022,ISBN: 978-8120348400.
4. Signals & Systems by Tarun Kumar Rawat, Oxford Publication, 1st Edition, ISBN:978-0198066798.
5. Signals & Stochastic Processes by Y Mallikarjuna Reddy and Giri Babu Kande, The Orient Blackswan Publication, 1st Edition, ISBN:978-9386235312.

Web Links:

1. https://onlinecourses.nptel.ac.in/noc21_ee28/preview
2. http://acl.digimat.in/nptel/courses/video/108106163/L16.html
3. https://ocw.mit.edu/courses/res-6-007-signals-and-systems-spring-2011/pages/lecture-notes/

Electromagnetic Waves & Transmission Lines

	L	T	P	C
Course Code:2501EC05	**2**	**1**	**0**	**3**

Course Outcomes:

At the end of the course student will be able to:

CO1: Interpret the properties of electric fields and magnetic fields.
CO2: Infer the Maxwell's equations for electric fields and magnetic fields.
CO3: Analyze the characteristics of uniform plane waves.
CO4: Interpret the fundamentals of transmission lines.
CO5: Apply impedance matching techniques for the transmission lines.

Mapping of Course Outcomes with Program Outcomes:

CO/PO	PO 1	PO 2	PO 3	PO 4	PO 5	PO 6	PO 7	PO 8	PO 9	PO 10	PO 11
CO1	3	2	-	-	-	-	-	-	-	-	-
CO2	3	2	-	-	-	-	-	-	-	-	-
CO3	3	2	-	-	-	-	-	-	-	-	-
CO4	3	1	-	-	-	-	-	-	-	-	-
CO5	2	2	-	-	-	-	-	-	-	-	-

Mapping of Course Outcomes with Program Specific Outcomes:

CO/PSO	PSO1	PSO2
CO1	1	-
CO2	2	-
CO3	2	-
CO4	2	-
CO5	2	-

UNIT – I

Electrostatics: Review of Co-ordinate Systems and Vector Calculus**,** Coulomb's Law, Electric Field Intensity, Electric Flux Density, GaussLaw and Applications, Electric Potential, Maxwell's Two Equations for Electrostatic Fields, Convection and Conduction Currents, Dielectric Constant, Continuity Equation, Capacitance, Energy Density in Electrostatic Fields.

UNIT – II

Magnetostatics: Biot-Savart Law, Ampere's Circuital Law and Applications,Magnetic Flux Density, Two Equations for Magneto static Fields, Magnetic Scalar and Vector Potentials, Forces due to Magnetic Fields, Inductance, Magnetic Energy.

Maxwell's Equations(Time Varying Fields): Faraday's Law and Transformer emf, Inconsistency of Ampere's Law and Displacement Current Density, Maxwell's Equations in Differential, Integral, Final Forms and Word Statements.

UNIT – III

EM Wave Characteristics-I: Uniform Plane Waves – Definition, Wave equations for Conducting and Perfect Dielectric media, Wave propagation in Lossy dielectrics, Lossless dielectrics and Free space, Wave propagation in good conductors, Skin depth, Polarization & Types.

EM Wave Characteristics-II: Reflection and Refraction of Plane Waves – Normal and Oblique Incidences for both Perfect Conductor and Perfect Dielectrics, Brewster Angle, Critical Angle and Total internal reflection, Surface Impedance, Poynting Vector and Poynting Theorem.

UNIT – IV

Transmission lines-I: Transmission Line Equations, Primary & Secondary Constants, Expressions for Characteristic Impedance, Propagation Constant, Phase and Group Velocities, Infinite Line, Lossless lines, Distortion less lines.

UNIT – V

Transmission lines-II: SC and OC Lines, Reflection Coefficient, VSWR, Impedance Transformations of $\lambda/4$, $\lambda/2$, $\lambda/8$ Lines, Smith Chart-Construction and Applications, Quarter wave transformer, Stub Matching-single & double.

Text Books:

1. Principles of Electromagnetics, Matthew N.O. Sadiku, and S.V. Kulkarni, Oxford University Press, 6th Edition,ISBN: 978-0199461851.
2. Electromagnetic Waves and Radiating Systems, E.C. Jordan and K.G. Balmain, PHI, 2nd Edition, ISBN: 978-9332551770.

Reference Books:

1. Engineering Electromagnetics, William H. Hayt, John A. Buck, Jaleel M. Akhtar, TMH, 9th Edition, 2020,ISBN: 978-9353169725.
2. Transmission Lines and Networks, UmeshSinha and Satya Prakashan, Technical India Publications, 2nd Edition,ISBN: 8176841889.
3. Electromagnetic Waves and Transmission Lines, Y Mallikarjuna Reddy, Universities Press, 1st Edition, ISBN: 978-8173719776 .

Web Links:

1. https://nptel.ac.in/courses/108106157
2. https://www.damtp.cam.ac.uk/user/tong/em.html
3. https://nptel.ac.in/courses/117103065

Analog Electronics

	L	T	P	C
Course Code:2501EC06	**2**	**0**	**2**	**4**

Course Outcomes:

At the end of the course, student will be able to:

CO1: Build the high frequency transistor amplifier circuits.
CO2: Analyze the frequency response of multi stage circuits.
CO3: Summarize the performance metrics of feedback amplifiers.
CO4: Construct low and high frequency oscillators for given specifications.
CO5: Analyze theperformance of power and tuned amplifiers.

Mapping of Course Outcomes with Program Outcomes:

CO/PO	PO 1	PO 2	PO 3	PO 4	PO 5	PO 6	PO 7	PO 8	PO 9	PO 10	PO 11
CO1	3	2	1	-	-	-	-	2	1	-	1
CO2	3	2	-	-	-	-	-	2	1	-	1
CO3	3	2	-	-	-	-	-	2	1	-	1
CO4	3	2	1	-	-	-	-	2	1	-	1
CO5	3	2	-	-	-	-	-	2	1	-	1

Mapping of Course Outcomes with Program Specific Outcomes:

CO/PSO	PSO1	PSO2
CO1	1	-
CO2	1	-
CO3	1	-
CO4	1	-
CO5	1	-

UNIT – I

Small Signal Analysis of Transistor Amplifiers at High Frequency: Two-Port network Approach, The transistor pi Model, Hybrid- π common emitter transistor model, Hybrid π conductance, Hybrid π-capacitances, validity of hybrid π model, CE short circuit current gain, current gain with resistive load, cut-off frequencies.
FET: Analysis of common Source and common drain Amplifier circuits at high frequencies.
Practice :

1. Introduction to OrCAD Software.

UNIT – II

Multistage Amplifiers: Classification of amplifiers, methods of coupling, analysis of CE amplifier, two stage RC coupled amplifier, cascode amplifier, High input resistance circuits: Darlington pair amplifier, Boot-strap emitter follower.

Practice:

1. Simulate a two stage RC coupled amplifier to obtain frequency response, voltage. Gain and Bandwidth. (OrCAD Software).
2. Construct a two stage RC coupled amplifier to obtain frequency response, voltage gain and bandwidth.

UNIT – III

Feedback Amplifiers: Feedback concept, types of feedback, classification of amplifiers, feedback topologies, Characteristics of negative feedback amplifiers, Generalized analysis of feedback amplifiers, Performance comparison of feedback amplifiers, Method of analysis of voltage and current series feedback amplifiers.

Practice:

1. Simulate voltage series feedback amplifier to obtain frequency response, voltagegain and bandwidth(OrCAD Software).
2. Construct voltage series feedback amplifier to obtain frequency response, voltage gain and bandwidth.

UNIT – IV

Oscillators: Oscillator principle, condition for oscillations, types of oscillators, RC-phase shift and Wein bridge oscillators with BJT and FET and their analysis, Generalized analysis of LC Oscillators, Hartley and Colpitt's oscillators with BJT and FET and their analysis, Frequency and amplitude stability of oscillators.

Practice:

1. Simulate a RC phase shift oscillator using BJT to generate a sinusoidal signal.(OrCAD Software)
2. Construct a RC phase shift oscillator using BJT to generate a sinusoidal signal.

UNIT – V

Power Amplifiers: Classification of amplifiers, Class A power Amplifiers and their analysis, Harmonic Distortions, Class B Push-pull amplifiers and their analysis, Complementary symmetry push pull amplifier, Class AB power amplifier, Class-C power amplifier, Class-D power amplifier, Class-E power amplifier, Class-F power amplifier, Class-G power amplifier, Class-H power amplifier.

Tuned Amplifiers: Introduction, Q-Factor, single tuned amplifier, double tuned amplifiers, staggered tuned amplifiers.

Practice:

1. Simulate a class-A power amplifier to obtain power efficiency. (OrCAD Software)
2. Construct a class-A power amplifier to obtain Q-point and power efficiency.
3. Simulate a single tuned amplifier to obtain frequency response, voltage gain and bandwidth. (OrCAD Software)
4. Construct a single tuned amplifier to obtain frequency response, voltage gain and bandwidth.

Additional Practice:

1. Construct three stage RC coupled amplifier and compare with two stage RC coupled amplifiers.
2. Construct Darlington pair amplifier to obtain frequency response, voltage gain and bandwidth.
3. Construct a Colpitt's oscillator using BJT to generate a sinusoidal signal.

Capstone project:

1. Design and test Audio Amplifier.

Text Books:

1. Electronic Devices and Circuits , Jacob Millman & Christos. C. Halkias, Satyabrata Jit, Tata McGraw Hill, 4th Edition, ISBN: 9789352601080.

2. Electronic Devices and Circuits, R.L. Boylestad and Louis Nashelsky, Pearson Publications, 10th Edition, 2020, ISBN: 9788131727003_U.

Reference Books:

1. Electronic Devices & Circuits, David A. Bell, Prentice Hall of India/Pearson Education, 5th Edition, 2018, ISBN: 019569340X.

2. Electronic Devices and Circuits, Anil Kumar Maini, Varsha Agrawal, John Wiley & Sons, ISBN: 9788126578085.

3. Electronic Circuit Analysis and Design, Donald A. Neaman, McGrawHill, ISBN: 9780072409574.

Web Links:

1. http://onlinecourses.nptel.ac.in/noc21_ee89

2. http://nptel.ac.in/courses/108/102/108102095

3. http://www.iitg.ac.in/apvajpeyi/ph218.html.

4. http://nptel.ac.in/courses/108/102/108102095 .

Integrated Circuits & Applications

	L	T	P	C
Course Code:2501EC07	**2**	**0**	**2**	**4**

Course Outcomes:

At the end of the course, student will be able to:

CO1: Construct Op-Amps using the differential amplifier and related circuitry.
CO2: Illustrate the parameters related to measurement of Op-Amp characteristics.
CO3: Construct the circuits for linear and non-linear applications using Op-Amp.
CO4: Build the data conversion circuits and construct the circuits for filtering applications using Op-Amp.
CO5: Analyse 555 Timer circuits and Phase Locked Loops.

Mapping of Course Outcomes with Program Outcomes:

CO/PO	PO 1	PO 2	PO 3	PO 4	PO 5	PO 6	PO 7	PO 8	PO 9	PO 10	PO 11
CO1	3	2									1
CO2	3	1									1
CO3	3	2	1								1
CO4	3	2	1								1
CO5	3	2									1

Mapping of Course Outcomes with Program Specific Outcomes:

CO/PSO	PSO1	PSO2
CO1	2	
CO2	2	
CO3	2	
CO4	2	
CO5	2	

UNIT – I

Introduction to Integrated Circuits: Integrated Circuits: Basic Concepts, Package Types, Temperature ranges and it's Power supplies. Differential Amplifier- DC and AC analysis of differential amplifier configurations, Cascaded Differential Amplifier Stages and Level translator.

UNIT – II

Characteristics of Op-Amps: Block Diagram, Pin diagram and Equivalent Circuit of an Op-Amp, Ideal and practical characteristics of an Op-Amp, DC and AC characteristics, Op-Amp Configurations: Inverting, Non-inverting and Difference amplifiers.

Practice:

1. Construct basic Applications of Op-Amp – Adder, and Subtractor Circuits.

UNIT – III

Linear and Non-Linear Applications of Op- Amps: Linear Applications - Integrator and Differentiator, Instrumentation amplifier, AC amplifier, Non-Linear Applications- Comparators, Schmitt trigger, Waveform Generators: Sine wave generator - RC phase shift oscillator, Free-running Oscillator, One-shot Multivibrators, Triangular wave and Sawtooth wave generators, Logarithmic Amplifiers, Precision rectifiers.

Practice:

1. Design Integrator and Differentiator Circuits using Op-Amp 741.
2. Construct Waveform Generator using single Op-Amp with variable duty cycle.
3. Design Schmitt Trigger Circuits using Single OP-Amp with Reference voltage.
4. Design a Function Generator using Op-Amp 741.

UNIT – IV

D-A and A-D Converters: Introduction, Basic DAC techniques: Weighted Resistor DAC, R-2R and Inverted R-2R ladder DAC, Basic ADC techniques: Parallel Comparator type, Successive Approximation type and Dual Slope ADC. Active Filters: Introduction, Butter worth filters – 1st order, 2nd order LPF, HPF filters. Band pass, Band reject and All pass filter.

Practice:

1. Design an Active Filters1 – LPF, HPF (First order) using Op-Amp 741.
2. Design an Active Filters 2 – BPF and Band Reject (First order) filters using Op-Amp 741.

UNIT – V

Timers & Phase Locked Loops: Introduction to IC 555 timer, Functional diagram, Monostable and Astable operations and applications, PLL - Introduction, Block schematic, Principles and Description of individual blocks, IC 565 PLL and its Applications, IC 566 VCO Internal Diagram and Applications.

Practice:

1. Construct Astable multivibrator using IC 555 Timer.
2. Construct Mono stable multivibrator using IC 555 Timer.
3. Evaluate Capture range and Lock range using PLL IC565

Additional Practice:

1. Design a 4-bit R-2R Ladder network with Op-Amp Buffer and Measure the output waveform for various input combinations.
2. Design and Construct DC Power Supply using three terminal Voltage Regulators 78XX and 79XX
3. Construct Precision half-wave rectifier and full-wave rectifier using Op-Amp 741.

Cornerstone Projects:

1. **Automatic Street Light Controller**
   Description: This project uses an LDR and IC 741 as a comparator to detect ambient light. The comparator switches ON street lights automatically during low-light conditions.
   Expected Outcome: Automatic switching of street lights based on day/night conditions, reducing power consumption.
2. **Water Level Indicator and Alarm**
   Description: This project uses IC 741 is configured as a comparator to monitor different water levels using conductive probes. A buzzer sounds when the tank becomes full.
   Expected Outcome: Accurate water level indication with overflow prevention.
3. **Rain Detection Alarm**
   Description: This project uses Rain sensor output is compared using IC 741. When rain is detected, a buzzer or LED is activated.
   Expected Outcome:
   Instant rain indication for agricultural and domestic applications.
4. **Traffic Light Controller**
   Description: This project uses one IC 555 timers to generate sequential timing signals for Red, Yellow, and Green LEDs.
   Expected Outcome: Automatic traffic signal operation with fixed timing sequence.
5. **Automatic Door Bell Timer**
   Description: This project uses IC 555 in monostable mode generates a fixed-duration output pulse whenever the push button is pressed.
   Expected Outcome: Produces a uniform doorbell ringing duration regardless of button press time.
6. **Smart Street Light Automation**
   Description: This project uses an LDR and an IR motion sensor with IC 741 configured as a comparator to detect ambient light and the presence of vehicles or pedestrians. The street light automatically switches ON during night-time and can operate at full brightness only when motion is detected, thereby reducing energy consumption.
   Expected Outcome: Automatic and energy-efficient street lighting with intelligent brightness control for smart city applications.

7. **Rain Detection and Automatic Window Controller**

   Description: This project uses a rain sensor with IC 741 as a comparator to detect rainfall, while an IC 555 timer controls the operation of a motor that automatically closes windows or sunroofs when rain is detected.

   Expected Outcome: Automatic protection of indoor spaces and equipment from rain, suitable for smart homes, greenhouses, and automobiles.

8. **Automatic Fire Detection and Alarm System**

   Description: This project uses a flame sensor and an LM35 temperature sensor with IC 741 configured as a comparator to detect fire or excessive temperature. An IC 555 timer generates an alarm signal through a buzzer and LED to provide an early warning.

   Expected Outcome: Reliable fire detection with immediate audio-visual alerts for homes, laboratories and industrial environments.

9. **Smart Intravenous (IV) Drip Monitoring System**

   Description: This project uses an IR sensor or load cell with IC 741 for signal conditioning and comparison to monitor IV fluid level and drip rate. When the IV bottle is nearly empty or the drip rate becomes abnormal, an alarm is generated to notify healthcare personnel.

   Expected Outcome: Continuous monitoring of IV infusion with timely alerts, improving patient safety and reducing manual supervision in hospitals.

10. **Smart Patient Health Monitoring System**

    Description: This project uses **IC 741 operational amplifiers** for amplification, filtering, and signal conditioning of body temperature and heart rate sensor signals. An **ESP32/NodeMCU** processes the conditioned signals and uploads the patient's vital parameters to an IoT cloud platform for real-time monitoring. An alarm is triggered if any parameter exceeds the preset threshold.

Expected Outcome: Real-time monitoring of patient vital signs with remote access and instant alerts during abnormal conditions, improving patient safety and reducing the need for continuous manual supervision.

11. IoT-Based Smart Water Quality Monitoring System

Description: This project uses **IC 741 operational amplifiers** for amplification, signal conditioning, and comparison of analog outputs from **pH, turbidity, and temperature sensors**. The conditioned signals are processed by an **ESP32/NodeMCU** and transmitted to an IoT cloud platform for real-time monitoring. An alarm is generated when any water quality parameter exceeds the predefined safe limits.

Expected Outcome: Continuous real-time monitoring of water quality parameters with remote access and instant alerts for unsafe conditions, enabling timely corrective actions and ensuring safe water for domestic, agricultural, and industrial applications.

12. IoT-Based ECG & Heart Rate Monitoring System

Description: This project uses **IC 741 operational amplifiers** for amplification, filtering, and signal conditioning of ECG and heart rate signals. The conditioned signals are processed by an **ESP32/NodeMCU** and transmitted to an IoT cloud platform for real-time monitoring. An alarm is generated if the ECG waveform or heart rate deviates from the preset normal range.

Expected Outcome: Continuous real-time monitoring of ECG and heart rate with remote access and instant alerts during abnormal cardiac conditions, enabling timely medical intervention and improving patient care in hospitals and home healthcare environments.

13. IoT-Based Smart Industrial Gas Leakage Detection System

Description: This project uses **IC 741 operational amplifiers** for signal conditioning and comparison of the analog output from an **MQ-2/MQ-135 gas sensor**. The conditioned signal is processed by an **ESP32/NodeMCU** and transmitted to an IoT cloud platform for real-time monitoring. When the gas concentration exceeds a preset

threshold, the system activates an alarm and sends instant notifications to authorized personnel.

Expected Outcome: Continuous real-time monitoring of industrial gas leakage with remote access and immediate alerts during hazardous conditions, improving workplace safety, preventing accidents, and enabling timely corrective action.

Note:

- The cornerstone project team size shall be four (4) students.
- Students may select any one of the above prescribed projects or a project of their own choice with the prior permission of the Course instructor.
- The evaluation of the Cornerstone Project shall be based on the project implementation, oral presentation, 10-minute video presentation, report and viva voce.
- The video presentation should consist of the working procedure of the project along with contribution of each student for a minimum of 2 minutes.
- Finally, the Source code of the cornerstone Project has to be pushed into the Students GitHub repository (if applicable).

Text Books:

1. Op-Amps and Linear Integrated Circuits, Ramakant A. Gayakwad, Pearson Education, 4th Edition, ISBN: 978-9332549913.
2. Linear Integrated Circuits, D. Roy Chowdhury and Shail B. Jain, New Age International Ltd, 4th Edition, 2021, ISBN: 9788122472127.

Reference Books:

1. Design with Operational Amplifiers & Analog Integrated Circuits, Sergio Franco, McGraw Hill, 4th Edition, ISBN: 978-9352601943.
2. Op-Amps and Linear Integrated Circuits: Concepts and Applications, James M Fiore, Cengage Learning India Ltd, 1st Edition, ISBN: 978-8131512340.

Web Links:

1. http://nptel.ac.in/courses/117108038/Prof.Gunashekaran M.K/IISc Bangalore
2. https://ocw.mit.edu/courses/electrical-engineering-and-computer-science/6-01sc-introduction-to-electrical-engineering-and-computer-science-i-spring-2011/unit-3-circuits/op-amps
3. http://www.creativeworld9.com/2011/02/learn-linear-ic-applications

Linear Control Systems

	L	T	P	C
Course Code:2501EC08	**2**	**1**	**0**	**3**

Course Outcomes:

At the end of the course, student will be able to:

CO1: Develop the overall transfer function using block diagram algebra and signal flow graphs.
CO2: Identify time response specifications, error constants of second order systems.
CO3: Analyze absolute and relative stability of LTI systems using Routh's stability criterion and the root locus method.
CO4: Analyze the stability of LTI systems using frequency response methods.
CO5: Develop state models for physical systems.

Mapping of Course Outcomes with Program Outcomes:

CO/PO	PO 1	PO 2	PO 3	PO 4	PO 5	PO 6	PO 7	PO 8	PO 9	PO 10	PO 11
CO1	2	1	3	-	-	-	-	-	-	-	1
CO2	2	3	1	-	-	-	-	-	-	-	1
CO3	2	3	2	-	-	-	-	-	-	-	1
CO4	2	3	2	-	-	-	-	-	-	-	1
CO5	2	2	3	-	-	-	-	-	-	-	1

Mapping of Course Outcomes with Program Specific Outcomes:

CO/PSO	PSO1	PSO2
CO1	3	-
CO2	2	-
CO3	2	-
CO4	2	-
CO5	2	-

UNIT – I

Mathematical Modeling of Control Systems: Classification of control systems, Open Loop and closed loop control systems and their differences, Feed-Back Characteristics, transfer function of linear system, Differential equations of electrical networks, Translational and Rotational mechanical systems, Block diagram algebra – Representation by Signal flow graph - Reduction using Mason's gain formula. Transfer Function of DC Servo motor.

UNIT – II

Time Response Analysis: Standard test signals, Time response of first and second order systems, Time domain specifications, Steady state errors and error constants, Effects of proportional derivative, proportional integral systems.

UNIT – III

Stability and Root locus Technique: The concept of stability, Routh's stability criterion, limitations of Routh's stability, Root locus concept, construction of root loci.

UNIT – IV

Frequency Response Analysis: Introduction to Frequency domain specifications-Bode diagrams- transferfunction from the Bode Diagram-Phase margin and Gain margin stability Analysis from Bode Plots, Polar Plots,Nyquist Stability criterion, Lag, Lead, Lag-Lead compensators.

UNIT – V

State Space Analysis of LTI Systems: Concepts of state, state variables and state model, state space representation of transfer function, Diagonalization- Solving the time invariant state equations- State Transition Matrix and its Properties – Concepts of Controllability and Observability.

Text Books:

1. Control Systems Engineering, I.J.Nagarath and M.Gopal, Newage International Publications, 7th Edition, 2021, ISBN: 978-8195175581.
2. Automatic control systems, Benjamin C.Kuo, Prentice Hall of India, 7th Edition, ISBN: 978-8120309685.

Reference Books:

1. Control Systems principles and design, M.Gopal, Tata McGraw Hill education Pvt Ltd., 4th Edition, ISBN: 978-0071333269.
2. Control Systems, Manik Dhanesh N, Cengage publications, 4th Edition, ISBN: 978-8131518120.
3. Modern Control Engineering, Kotsuhiko Ogata, Prentice Hall of India, 5th Edition, ISBN: 978-9332550162.

Web Links:

1. https://www.electrical4u.com/state-space-analysis-of-control-system
2. https://nptel.ac.in/courses/107/106/107106081

Analog & Digital Communications

	L	T	P	C
Course Code:2501EC09	**2**	**1**	**1**	**4**

Course Outcomes:

At the end of the course, student will be able to:

CO1: Interpret the modulation and demodulation techniques of AM.
CO2: Explain the concepts of Angle modulation and demodulation.
CO3: Interpret the transmitter and receiver sections.
CO4: Infer Pulse analog modulation and demodulation Techniques.
CO5: Inspect the characteristics of Pulse Digital Modulation Techniques.

Mapping of Course Outcomes with Program Outcomes:

CO/PO	PO 1	PO 2	PO 3	PO 4	PO 5	PO 6	PO 7	PO 8	PO 9	PO 10	PO 11
CO1	3	2	-	-	-	-	-	2	1	-	1
CO2	3	2	-	-	-	-	-	2	1	-	1
CO3	3	2	-	-	-	-	-	2	1	-	1
CO4	3	2	-	-	-	-	-	2	1	-	1
CO5	3	2	-	-	-	-	-	2	1	-	1

Mapping of Course Outcomes with Program Specific Outcomes:

CO/PSO	PSO1	PSO2
CO1	2	-
CO2	2	-
CO3	2	-
CO4	2	-
CO5	2	-

UNIT – I

Amplitude Modulation: Need for modulation, Amplitude Modulation - Time and frequency domain description, single tone modulation, power relations in AM waves, Switching modulator, Envelope detector, DSBSC modulation - time and frequency domain description, Balanced Modulator, Coherent detection, COSTAS Loop, SSB modulation - time and frequency domain description, frequency discrimination method, Demodulation of SSB Waves, VSB modulation and Demodulation.

Practice:

1. Generate amplitude modulated signal,determine the percentage modulation anddemodulate the modulated signal using envelope detector.
2. Generate AM-DSBSC modulated signal and demodulate the modulated signal.

UNIT – II

Angle Modulation: Basic concepts of Phase Modulation, Frequency Modulation: Single tone Frequency modulation, Narrow band FM, Wide band FM, Constant Average Power, Transmission bandwidth of FM Wave - Generation of FM Signal- Armstrong Method, Direct method- Reactance Modulator, Detection of FM Signal: Balanced slope detector, Phase locked loop, Comparison of FM and AM., Concept of Pre-emphasis and de-emphasis.

Practice:

1. Generate frequency modulated signal, determine the modulation index and bandwidth, also demodulate the frequency modulated signal.
2. Plot the frequency response of pre-emphasis and de-emphasis circuits.

UNIT – III

Transmitters and Receivers: Classification of Transmitters, AM Transmitters, FM Transmitters Receivers: Radio Receiver - Receiver Types - Tuned radio frequency receiver, Superheterodyne receiver, RF section and Characteristics - Frequency changing and tracking, Intermediate frequency, Image frequency, AGC, Amplitude limiting, FM Receiver, Comparison of AM and FM Receivers.

Practice:

1. Verify the characteristics of mixer.
2. Experimentally study the characteristics of a given AGC circuit.

UNIT – IV

Pulse Modulation: Types of Pulse modulation- Generation and Reconstruction of PAM, PWM and PPM.

Pulse Code Modulation: PCM Generation and Reconstruction, Non- Uniform Quantizationand Companding, DPCM, DM and Adaptive DM, Noise in PCM and DM.

Practice:

1. Analyze the process of pulse amplitude modulation and demodulation.
2. Analyze the process of pulse position modulation and demodulation.

UNIT – V

Digital Modulation Techniques: ASK, FSK, BPSK and QPSK Modulators and Detectors, Differential PSK, QAM, Baseband Signal Receiver, Optimum Receiver, Calculation of Probability of Error.

Practice:

1. Observe the process of Frequency Shift Keying Modulation and Demodulation.
2. Verify the process of Phase ShiftKeying Modulation and Demodulation.

Additional Practice:

1. Verify the characteristics of receiver.
2. Verify the process of Differential Pulse Code Modulation andDemodulation.

Case Study:

1. Performance Comparison of Modulation Techniques
   Students can implement and compare both analog and digital modulation techniques.

Text Books:

1. Modern digital and analog communication systems by B.P.Lathi, Zhi Ding,oxford,4th Edition, ISBN:978-0199476282.
2. Introduction to Analog and Digital Communications by Simon Haykin, Wiley,2nd Edition, ISBN:978-0-471-43222-7.
3. Analog and Digital Communication – K. Sam Shanmugam, Willey, 2018, ISBN:9788126509140.

Reference Books:

1. Principles of Communication Systems - Herbert Taub, Donald L Schilling, Goutam Saha, McGraw-Hill, 4th Edition, ISBN:978-1259029851.
2. Electronics Communication Systems-Fundamentals through Advanced-Wayne Tomasi, Pearson, 5th Edition, 30 August 2019, ISBN:978-0130494924.

Web Links:

1. https://archive.nptel.ac.in/courses/117/105/117105143/
2. https://onlinecourses.nptel.ac.in/noc21_ee74
3. https://archive.nptel.ac.in/courses/108/102/108102096
4. https://archive.nptel.ac.in/courses/117/101/11710105

Digital Signal Processing

Course Code: 2501EC10	L	T	P	C
	2	0	1	3

Course Outcomes:

At the end of the course, student will be able to:

CO1: Summarize discrete time signals and systems in time and frequency domain.
CO2: Compute the DFT using FFT algorithms.
CO3: Design IIR filters using different techniques.
CO4: Design FIR filters using different techniques.
CO5: Extend the concept of single-rate signal processing to multi-rate signal processing.

Mapping of Course Outcomes with Program Outcomes:

CO/PO	PO 1	PO 2	PO 3	PO 4	PO 5	PO 6	PO 7	PO 8	PO 9	PO 10	PO 11
CO1	3	2		1	2			2	2		1
CO2	3	2		1	2			2	2		1
CO3	3	2	3	1	2			2	2		1
CO4	3	2	3	1	2			2	2		1
CO5	3	2		1	2			2	2		1

Mapping of Course Outcomes with Program Specific Outcomes:

CO/PSO	PSO1	PSO2
CO1	2	
CO2	2	
CO3	2	
CO4	2	
CO5	2	

UNIT – I

Introduction: Introduction to Digital Signal Processing: Discrete-time signals & sequences, Classification of discrete-time systems, stability and causality of LTI systems. Discrete-time Fourier Transform (DTFT), Frequency domain representation of discrete-time signals and systems. Linear Convolution, System function.

Practice:

1. Generation of basic signals (impulse,step,ramp,exponential,sine square,triangle).
2. Perform addition of two or more sinusoidal signals with different frequencies.

UNIT – II

Discrete Fourier Series & Fourier Transforms: Properties of discrete Fourier series, DFS representation of periodic sequences, Discrete Fourier transforms: Properties of DFT, linear filtering methods based on DFT, Fast Fourier transforms (FFT)-Radix-2

decimation-in-time and decimation-in-frequency FFT Algorithms, Inverse FFT, Linear Convolution using Circular Convolution.

Practice:

1. Calculate the Discrete Fourier Transform (DFT) and Inverse Discrete FourierTransform (IDFT) of a given discrete signal.
2. Perform circular and linear convolution using DFT.

UNIT – III

Design of IIR Digital Filters & Realizations: Analog filter approximations-Butterworth and Chebyshev, Design of IIR Digital filters from analog filters, Design Examples, Analog and Digital frequency transformations. Direct form -I, Direct form -II, Cascade form and Parallel form realization of IIR systems.

Practice:

1. Obtain frequency response of IIR Low Pass Butterworth filters.
2. Obtain frequency response of IIR Low Pass Chebyshev filters.

UNIT – IV

Design of FIR Digital Filters & Realizations: Characteristics of FIR Digital Filters, Frequency response, Design of FIR Digital Filters using Window technique, Comparison of IIR & FIR filters, Direct form, Cascade form and Parallel form realization of FIR systems.

Practice:

1. Obtain frequency response of FIR Low Pass filter using Rectangular Window.
2. Obtain frequency response of FIR Low Pass filter using Hamming Window.

UNIT – V

Multirate Digital Signal Processing: Introduction, Decimation, Interpolation Sampling rate conversion, Implementation of Sampling rate converters, Applications: Sub-band Coding of Speech Signals, Implementation of Digital Filter Banks, Trans-multiplexers.

Practice:

1. Perform decimation and interpolation on signals.
2. Perform Sampling rate conversion on signals.

Text Books:

1. Digital Signal Processing, Principles, Algorithms and Applications, John G. Proakis, Dimitris G. Manolakis, Pearson Education/PHI, ISBN: 978-9332535893.

2. Digital Signal Processing, Tarun Kumar Rawat, Oxford University Press, 1st Edition, ISBN: 978-0198081937.

Reference Books:

1. Discrete Time Signal Processing, A. V. Oppenheim and R. W. Schaffer, PHI, ISBN: 978-0131988422.
2. Multirate Systems and Filter Banks, P.P.Vaidyanathan, Pearson, 1st Edition, ISBN: 978-0136057185.

Web Links:

1. https://nptel.ac.in/courses/117/102/117102060/ (Digital Signal Processing by Prof. S.C. Dutta Roy, IIT Delhi)
2. https://nptel.ac.in/courses/117/102/117102060/(Digital Signal Processing - Video course, Coordinator BY Prof. S.C. Dutta Roy Department of Electrical Engineering IIT Delhi).
3. http://www.dspguide.com/pdfbook.htm
4. http://vlabs.iitkgp.ernet.in/dsp/

VLSI Design

	L	T	P	C
Course Code: 2501EC11	**2**	**0**	**2**	**4**

Course Outcomes:

At the end of the Course, Students will be able to:

CO1: Outline the fundamental concepts related to MOS and Bi-CMOS Circuits fabrication.
CO2: Analyze the electrical properties of MOS and Bi-CMOS Circuits.
CO3: Make use of design rules for developing stick and layout diagrams.
CO4: Infer the physical circuit parameters in terms of scaling.
CO5: Interpret the issues related to subsystem design.

Mapping of Course Outcomes with Program Outcomes:

CO/PO	PO1	PO2	PO3	PO4	PO5	PO6	PO7	PO8	PO9	PO10	PO11
CO1	3	2									1
CO2	3	2									1
CO3	3	2									1
CO4	3	2	1								1
CO5	3	2	1								1

Mapping of Course Outcomes with Program-Specific Outcomes:

CO/PSO	PSO1	PSO2
CO1		2
CO2		2
CO3		2
CO4		2
CO5		2

UNIT – I

Introduction: Introduction to IC Technology, MOS and related VLSI Technology, Basic MOS Transistors, Enhancement and Depletion modes of transistor action, IC production process, MOS and CMOS Fabrication processes, BiCMOS Technology, Comparison between CMOS and Bipolar technologies.

Practice:

1. Digital circuit Simulation overview.
2. Digital circuits simulation and functional response verification of basic gates.
3. V-I Characteristics of nMOSFET & pMOSFET.

UNIT – II

Basic Electrical Properties Of MOS and Bi-CMOS Circuits: Ids versus Vds Relationships, Aspects of MOS transistor Threshold Voltage, MOS transistor Trans, Output Conductance, and Figure of Merit. The Pass transistor, NMOS Inverter, Pull-up to Pull-down Ratio for NMOS inverter driven by another NMOS inverter. Alternative forms of pull-up include the CMOS Inverter, MOS transistor circuit model, Bi-CMOS Inverter, Latch-up in CMOS circuits. Realization of gates using NMOS, PMOS, and CMOS technologies.

Practice:

1. Digital circuits simulation and functional response verification of combinational circuits.
2. Realization of schematics and functional response verification of complex gates.

UNIT – III

MOS and Bi-CMOS Circuit Design Processes: MOS Layers, Stick Diagrams, Design Rules and Layout, General Observations on the Design rules, 2µm Double Metal, Double Poly, CMOS/BiCMOS rules, 1.2µm Double Metal, Double Poly CMOS rules, Layout Diagrams of NAND and NOR gates and CMOS inverter, Symbolic Diagrams-Translation to Mask Form

Practice:

1. Layout extraction of basic gates.
2. Layout Extraction of combinational circuits.

UNIT – IV

Basic Circuit Concepts: Sheet Resistance, Sheet Resistance concept applied to MOS transistors and Inverters, Area Capacitance of Layers, Standard unit of capacitance, The Delay Unit, Inverter Delays, Propagation Delays, Wiring Capacitances, Fan-in and fan-out characteristics, Choice of layers, Transistor switches,

Practice:

1. Performing DRC for basic gates and combinational circuits.
2. Performing LVS/Netlist extraction for logic gates.

UNIT – V

Scaling of MOS Circuits: Scaling models, Scaling factors for device parameters, Limits due to sub-threshold currents, current density limits on logic levels, and supply voltage due to noise. Subsystem Design: Architectural issues, switch logic, Gate logic, examples of structured design, clocked sequential circuits, system considerations, general considerations of subsystem design processes, and an illustration of design processes.

3.

Practice:

1. Performing LVS/Netlist extraction for complex gates and combinational circuits.
2. PEX estimation for the given logic circuits.

Additional Practice:

1. Layout design for specific constraints (delay, power dissipation).
2. DRC/LVS/PEX verification of the Multiplexer.
3. DRC/LVS/PEX verification of given SOP (Z= (AB+C)D)'.

Software Tools Used:

1. Cadence Virtuoso - Schematic & Layout Design.
2. Cadence Spectre - Circuit Simulation.
3. Cadence ViVA - Waveform Analysis.
4. Cadence Assura (or Pegasus) - DRC, LVS, PEX.

Practice:

1. Introduction to Cadence Environment (1 Week).
    a. Introduction to VLSI design flow.
    b. Overview of Cadence Virtuoso interface.
    c. Library creation, schematic entry.
    d. Basic Linux commands for Cadence.
2. MOS Device Simulation (1 Week).
    a. Simulation of nMOS and pMOS characteristics using Cadence Spectre.
    b. Ids-Vds and Ids-Vgs plots.
    c. Waveform visualization using Cadence ViVA.
3. CMOS Circuit Design (2 Weeks).
    a. CMOS inverter design using Cadence Virtuoso.
    b. Design of NAND, NOR gates.
    c. Transient and DC analysis using Spectre.
4. Combinational Circuit Design (2 Weeks).
    a. Design of complex CMOS gates.
    b. Multiplexer and SOP realization.
    c. Functional verification using Spectre + ViVA.
5. Layout Design (2 Weeks).
    a. Stick diagram to layout conversion.
    b. Layout design using Cadence Virtuoso.
    c. Layout of inverter, NAND, and NOR gates.
6. Physical Verification (2 Weeks).
    a. DRC (Design Rule Check) using Cadence Assura.
    b. LVS (Layout vs Schematic) verification.
    c. PEX (Parasitic Extraction).
7. Performance Analysis (1 Week).
    a. Delay and propagation analysis.
    b. Power estimation using Spectre.
    c. Fan-in and fan-out effects.

Mini Tasks:

1. CMOS inverter sizing (pull-up/pull-down ratio).
2. Stick diagram to layout conversion.
3. Delay calculation using simulation.
4. Parasitic capacitance impact analysis.

Cornerstone Projects:

1. **CMOS Half Adder Design**

   Description: Design and implement a CMOS half adder using basic logic gates in the Cadence environment. Perform schematic design, simulate the circuit, generate layout, and verify using DRC, LVS, and PEX. Compare its performance with a full adder.

   Expected Outcome: A fully functional CMOS half adder with verified layout and correct output waveforms, along with analysis of delay and power consumption.

2. **CMOS Full Adder Design (Multiple Styles)**

   Description: Design and implement a CMOS full adder using different logic styles such as conventional CMOS and transmission gate logic. Perform schematic design, simulation, layout generation, and verification using DRC, LVS, and PEX. Compare the designs based on power, delay, and area.

   Expected Outcome: A verified CMOS full adder layout with comparative analysis showing trade-offs between different design styles in terms of performance metrics.

3. **4-bit Ripple Carry Adder**

   Description: Design and implement a 4-bit ripple carry adder by cascading full adders. Perform schematic design, simulate the circuit, generate layout, and analyze propagation delay due to the carry chain.

   Expected Outcome: A working 4-bit adder with verified layout and demonstrated understanding of delay propagation in cascaded arithmetic circuits.

4. **Multiplexer Design (2:1, 4:1, 8:1)**

   Description: Design and implement multiplexers of different sizes using CMOS logic. Perform schematic design, simulation, layout generation, and verification. Analyze fan-in and fan-out effects on performance.

   Expected Outcome: A functional multiplexer design with verified layout and analysis of scalability, delay, and switching behavior.

5. SR Latch and D Flip-Flop Design

Description: Design and implement SR latch and D flip-flop circuits using CMOS logic. Perform schematic design, simulate sequential behavior, generate layout, and verify using DRC and LVS.

Expected Outcome: A correctly functioning sequential circuit with verified layout and timing behavior observed through simulation.

6. Ring Oscillator Design

Description: Design a ring oscillator using an odd number of CMOS inverters. Perform schematic design, simulate oscillations, generate layout, and analyze oscillation frequency and delay.

Expected Outcome: A working ring oscillator with measurable frequency and a validated relationship between delay and oscillation frequency.

7. CMOS Comparator Design

Description: Design and implement a CMOS comparator circuit. Perform schematic design, simulate comparison operation, generate layout, and verify using DRC and LVS.

Expected Outcome: A functional comparator circuit capable of distinguishing input levels with proper switching characteristics.

8. Clock Buffer / Driver Design

Description: Design a CMOS buffer/driver circuit capable of driving large capacitive loads. Perform schematic design, simulate performance, generate layout, and analyze fan-out effects.

Expected Outcome: A buffer circuit with improved driving capability and reduced delay, validated through simulation and layout verification.

9. Low Power CMOS Inverter Design

Description: Design a CMOS inverter optimized for low power consumption by adjusting transistor sizing. Perform simulation, layout, and analysis of static and dynamic power.

Expected Outcome: A power-optimized inverter design with measurable reduction in power consumption and acceptable delay performance.

10. Carry Look-Ahead Adder Design

Description: Design and implement a carry look-ahead adder to improve speed over ripple carry architecture. Perform schematic design, simulation, layout, and timing analysis.

Expected Outcome: A high-speed adder with reduced propagation delay compared to the ripple carry adder, validated through simulation.

11. Power vs Delay Trade-off Study

Description: Design a CMOS circuit with different transistor sizing configurations. Perform simulations to study the trade-off between power consumption and delay.

Expected Outcome: A comparative analysis demonstrating the relationship between power and delay, supported by simulation results.

12. Parasitic-Aware Design (PEX Based)

Description: Design a CMOS circuit and perform both pre-layout and post-layout simulations. Analyze the effect of parasitic elements extracted using PEX.

Expected Outcome: A clear comparison showing the impact of parasitics on circuit performance, including delay degradation.

13. Area-Optimized Layout Design

Description: Design a compact layout for a given CMOS circuit using techniques like shared diffusion and optimal placement.

Expected Outcome: A minimized area layout with correct functionality and adherence to design rules.

14. Design Rule Violation Study

Description: Create a layout with intentional design rule violations and correct them using the DRC tool.

Expected Outcome: A corrected layout demonstrating understanding of design rules and their importance in fabrication.

15. LVS Debugging Project

Description: Design a circuit with mismatches between schematic and layout, then identify and fix errors using LVS.

Expected Outcome: A verified layout matching the schematic, demonstrating debugging capability.

16. Custom Standard Cell Design

Description: Design basic standard cells like inverter, NAND, NOR with fixed height and optimized layout.

Expected Outcome: A set of standard cells suitable for digital design with a consistent layout structure.

17. Mini Standard Cell Library Creation

Description: Create a small library of standard cells and characterize them for delay and power.

Expected Outcome: A basic standard cell library with documented performance metrics.

18. Mini Chip Design Project

Description: Design a small functional block (e.g., ALU or controller) and implement a complete flow, including schematic, layout, and verification.

Expected Outcome: A fully verified mini VLSI design demonstrating complete design flow.

Note:

- The cornerstone project team size shall be four (4) students.
- Students may select any one of the above prescribed projects or a project of their own choice with the prior permission of the Course instructor.
- The evaluation of the Cornerstone Project shall be based on the project implementation, oral presentation, 10-minute video presentation, report and viva voce.
- The video presentation should consist of the working procedure of the project along with contribution of each student for a minimum of 2 minutes.
- Finally, the Source code of the cornerstone Project has to be pushed into the Students GitHub repository (if applicable).

Text Books:

1. Essentials of VLSI Circuits and Systems by Kamran Eshraghian, Douglas, and A. Pucknell, and Sholeh Eshraghian, Prentice-Hall of India Private Limited, ISBN:978-8120327726.
2. VLSI Design-Black Book By Dr. K.V.K.K. Prasad, Kattula Shyamala, Kogent Learning Solutions Inc, ISBN: 978-9350048047.

Reference Books:

1. VLSI Design, A. Albert Raj & T. Latha, PHI Learning Private Limited, ISBN:978-8120334311.

2. VLSI Design, A.Shanthi and A. Kavita, New Age International Private Limited, First Edition, ISBN:978-8122418668.
3. VLSI Design By Debaprasad Das, Oxford University Press, ISBN: 978-0198067665.

Web Links:

1. https://www.southampton.ac.uk/~bim/notes/cad/
2. http://www.ece.utep.edu/courses/web5392/Lab_7.html
3. http://www.ece.utep.edu/courses/web5392/Notes.html
4. http://www.ittc.ku.edu/~jstiles/312/handouts/
5. https://www.mepits.com/tutorial/384/vlsi/steps-for-ic-manufacturing
6. **NPTEL -** https://www.youtube.com/@IITRoorkeeJuly/videos
7. https://www.youtube.com/@VLSIDesign_SSG/videos
8. https://www.youtube.com/@dr.hariprasadnaikbhattu/videos
9. https://www.youtube.com/@vlsiclasses/videos
10. https://www.youtube.com/@electronicechos/videos

Microprocessors & Microcontrollers

Course Code: 2501EC12

L	T	P	C
2	0	1	3

Course Outcomes:
At the end of the Course, Student will be able to:

CO1: Interpret the architecture of microcomputer systems.
CO2: Develop assembly language program for 8086.
CO3: Demonstrate the interfacing of peripherals to microprocessor.
CO4: Infer the architecture of 8051 microcontroller.
CO5: Demonstrate the interfacing of peripherals to 8051 microcontrollers.

Mapping of Course Outcomes with Program Outcomes:

CO/PO	PO 1	PO 2	PO 3	PO 4	PO 5	PO6	PO 7	PO 8	PO 9	PO 10	PO 11
CO1	3	1	2	1	1	-	-	-	-	-	1
CO2	3	2	2	1	2	-	-	-	-	-	1
CO3	3	2	2	1	2	-	-	-	-	-	1
CO4	3	1	2	1	2	-	-	-	-	-	1
CO5	3	1	2	1	2	-	-	-	-	-	1

Mapping of Course Outcomes with Program Specific Outcomes:

CO/PSO	PSO1	PSO2
CO1	-	2
CO2	-	2
CO3	-	2
CO4	-	2
CO5	-	2

DRAFT

Unit – I
Introduction: Overview of microcomputer systems and their building blocks, Basic Microprocessor architecture, 8086 Microprocessor, Main features, 8086 internal architecture, Register Organization of 8086. Memory Segmentation. Pin description of 8086, Physical Memory Organization, system timing, minimum mode and maximum mode configuration, interrupt structure and Interrupt Vector table.
Practice:
1. Introduction to MASM Software.

Unit – II
8086 Programming: Instruction set, addressing modes, assembler directives, writing programs with an assembler, assembly language program development tools.
Practice:
1. Write an Assembly language program to perform Arithmetic operations on 8-bit data.
2. Write an Assembly language program to perform Multi byte addition and subtraction.
3. Write an Assembly language to sort the given numbers in an ascending order.
4. Write an Assembly language program to move block of data.
5. Write an Assembly language program to compare the given strings.

Unit – III

8086 Interfacing: Memory Interfacing: Semiconductor memories interfacing (RAM, ROM). **I/O Interfacing:** 8255 programmable peripheral interface- Interfacing of switches and LEDS, keyboard interfacing, Interfacing of stepper motor, Interfacing of A/D and D/A converters. 8237 DMA controller, 8259 programmable interrupt controller.

Practice:

1. Interface DAC to 8086 using 8255 to generate square wave and triangular wave.
2. Interface stepper motor to 8086using 8255 to rotate clockwise and anti-clock wise directions.

Unit – IV

Intel 8051 Microcontroller: Features, pin description, architecture, external memory connection, counters and timers, serial data input/output ports, interrupts, instruction set, addressing modes, programs.

Practice:

1. Introduction to KEIL Software.
2. Write an ALP to find Number of 1's and number of 0's in a given 8-bit.
3. Write an ALP to generate square wave using Timer control.

Unit – V

8051 Interfacing: Interfacing of A/D and D/A converters, keyboard, displays (LED, 7-segment display unit and LCD) and Stepper motor.

Practice:

1. Interface 7-Segment Display to 8051using proteus software.

Text Books:

1. Microprocessors & Interfacing, Douglas V Hall, McGraw Hill, Revised 3rd Edition, ISBN: 978-1259006159.
2. The 8051 Micro Controller Architecture, Programming and Applications, Kenneth J Ayala, Thomson Publishers, 2nd Edition, ISBN: 978-0314201881.

Reference Books:

1. Advanced Microprocessors and Interfacing, K.M. Bhurchandi, A.K. Ray, Tata McGraw Hill, 3rd Edition, ISBN: 978-1259006135.
2. The 8051 Microcontrollers and Embedded systems: Using Assembly and C, Muhammad Ali Mazidi, Janice Gillespie Mazidi and Rollin D. McKinlay; Pearson 2nd Edition, ISBN: 978-8131758991.

Web Links:

1. https://archive.nptel.ac.in/courses/108/103/108103157/
2. https://archive.nptel.ac.in/courses/106/108/106108100/

Antenna & Microwave Engineering

	L	T	P	C
Course Code:2501EC13	**2**	**0**	**2**	**4**

Course Outcomes:

At the end of the course, student will be able to:

CO1: Make comment on various antenna performance parameters.
CO2: Infer the fields and patterns of different antennas.
CO3: Explain the behavior of different RF and Microwave antenna structures.
CO4: Explain the characteristics of wave guide structures and its performance.
CO5: Apply different measurement techniques at Microwave range on Active and Passive devices todetermine their properties.

Mapping of Course Outcomes with Program Outcomes:

CO/PO	PO 1	PO 2	PO 3	PO 4	PO 5	PO 6	PO 7	PO 8	PO 9	PO 10	PO 11
CO1	3	2	1	-	-	-	-	1	1	-	-
CO2	3	2	1	-	-	-	-	2	2	-	-
CO3	2	2	-	-	-	-	-	2	2	-	-
CO4	3	2	-	1	-	-	-	1	1	-	-
CO5	3	2	1	-	-	-	-	1	-	-	1

Mapping of Course Outcomes with Program Specific Outcomes:

CO/PSO	PSO1	PSO2
CO1	3	-
CO2	2	-
CO3	3	-
CO4	2	-
CO5	2	-

UNIT – I

Antenna Fundamentals: Introduction, Radiation Mechanism, Single wire and Two wire antenna, Half wave dipole, Basic Antenna Parameters, Radiation Pattern, Beam width, Radiation Intensity, Directivity and Gain, Antenna aperture, Beam efficiency, Effective antenna height, Antenna bandwidth, Input impedance, Antenna temperature and FRIIS transmission equation.

Practice:

1. Measurement of radiation pattern of an antenna.

UNIT – II

Antenna Arrays: Introduction-2-element arrays – different cases, Principle of Pattern Multiplication, N-element Uniform Linear Arrays – Broadside, End-fire Arrays, EFA with Increased Directivity (no derivations).

UNIT – III

VHF, UHF and Microwave Antennas: Folded Dipoles and their characteristics, Arrays with Parasitic Elements, Yagi - Uda Arrays. Helical Antennas – Significance, Geometry, Design Parameters; Parabolic Reflector Antenna, Horn Antennas–Types and analysis.**Antenna Measurements:** Set up, Pattern measurement, Impedance measurement, Directivity and Gain measurements.

Practice:

1. Measurement of gain of an antenna

UNIT – IV

Microwave transmission lines: History of microwaves, Microwave Frequency bands, Characteristics, advantages, disadvantages and applications, Analysis of Microwave Transmission Lines- Rectangular waveguide.

Multiport networks: Overview on wave guide discontinuities-Irises, Tuning Screws, Posts and Matched loads. S-Matrix calculations and analysis for E-plane and H-plane Tees, Magic Tee and Directional Coupler.

Practice:

1. Measurement of Directional Coupler characteristics.
2. Measurement of Circulator characteristics.

UNIT – V

Microwave Tubes: Limitations and Losses of conventional tubes at microwave frequencies, Two Cavity Klystron - Velocity Modulation and Applegate Diagram, Bunching Process. Reflex Klystron - Applegate Diagram and Principle.

Microwave Measurements: Measurement of Power, Impedance, Attenuation, and VSWR.

Practice:

1. S/N & C/N measurement by using Satellite Tx. and Rx. Set up.
2. Frequency Measurement by using Doppler RADAR Set up.
3. Measurement of VSWR using microwave bench.
4. Measurement of Reflex Klystron Characteristics.
5. Measurement of Attenuation of a given RF Slot.
6. Measurement of GUNN Diode (TED) V-I Characteristics.

Additional Practice:

1. Measurement of waveguide parameters.
2. Measurement of antenna parameters by using Antenna Trainer.
3. Measurement of transmission/reception characteristics by using Satellite Tx. and Rx. Set up.
4. Measurement of transmission/reception characteristics by using Satellite Tx and Rx Set up.

Text Books:

1. Antenna Theory analysis and design, Constantine A. Balanis, John Wiley publication, 4th Edition, ISBN:978-1118642061.
2. Microwave Devices and circuits, Samuel Y. Liao, PHI, 3rd Edition, ISBN: 978-8177583533.

Reference Books:

1. Antenna & Wave Propagation, K. D. Prasad, Khanna Publication, Revised and enlarged Edition, 2021, ISBN: 978-8176840255.
2. Antennas and Wave Propagation, John D. Kraus and Ronald J. Marhefka, TMH, 5th Edition, ISBN: 978-9352606184.
3. Microwave Engineering, Sushrut Das, Oxford University Press, ISBN:9780198094746.
4. Microwave Engineering, David M Pozar, John Wiley, 4th Edition, ISBN: 978-1119770619.

Web Links:

1. http://www.amanogawa.com/antenna.html
2. http://nptel.ac.in/courses/117107035/byDr. Amalendu Patnaik
3. http://www.radio-electronics.com/info/antennas/
4. http://www.radartutorial.eu/index.en.html

Multi-Disciplinary Courses (MDC)

Course Code	Course Name	Level	L	T	P	C	CIE	SEE	Total	Pre-requisite
2501CS03/ 2601DS02	Data Structures* / Data Structures using C++#	FC	2		2	4	50	50	100	PPSC
2501MB01	Engineering Economics & Management	FC	2			2	50	50	100	-
	Total		**4**		**2**	**6**				

Data Structures
(Common to EEE, ECE, CSE, IT, AIML & CSE(DS))
(Syllabus for the batch admitted in the year 2025)

	L	T	P	C
Course Code:2501CS03	**2**	**0**	**2**	**4**

Course Outcomes:
At the end of the course, student will be able to:

CO1: Utilize structure, union to handle heterogeneous data.
CO2: Illustrate Time and Space complexities for different sorting Algorithms
CO3: Demonstrate various operations on Linked Lists
CO4: Explain different operations on Stack and Queue with applications.
CO5: Demonstrate the importance and various operation on non-linear data structures

Mapping of Course Outcomes with Program Outcomes:

CO/PO	PO 1	PO 2	PO 3	PO 4	PO 5	PO 6	PO 7	PO 8	PO 9	PO 10	PO 11
CO1	1	1	2					1	1		
CO2	1	1	2	2				1	1		
CO3	1	2	2	1				1	1		
CO4	1	1	2	1				1	1		
CO5	1	1	2	2				1	1		

Mapping of Course Outcomes with Program Specific Outcomes:

CO/PSO	PSO1	PSO2
CO1	3	-
CO2	2	-
CO3	2	-
CO4	2	-
CO5	2	-

UNIT – I
Structures and Unions: Introduction, Nested Structures, Arrays of Structures, Structures and Functions, Self-Referential Structures, Unions, Enumerated Data Type - enum variables, Using Typedef keyword, Bit Fields.
Data Structures: Introduction to Data Structures, Types of Data Structures.

Practice:

4. Write a C program to find the total, average of n students using structures
5. Copy one structure variable to another structure of the same type.
6. Read student name and marks from the command line and display the student details along with the total.

UNIT – II
Introduction to Linear Data Structures: Definition and importance of linear data structures, Abstract data types (ADTs) and their implementation, Overview of time and space complexity analysis for linear data structures.
Sorting Techniques: Quick sort, Merge sort, Radix sort

Practice:

1. Implement Merge sort using arrays.
   https://www.hackerrank.com/contests/hw1/challenges/merge-sort
2. Implement Quick sort using arrays
   https://www.hackerrank.com/challenges/quicksort1/problem
3. Implement Radix Sort using arrays
   https://www.hackerrank.com/contests/hw1/challenges/radix-sort?utm_source

UNIT – III

Linked Lists: Singly linked lists: representation and operations, doubly linked lists and its operations and circular linked lists and its operations, Comparing arrays and linked lists, Applications of linked lists.

Practice:

1. Single Linked List: Perform different operations in single linked list.
   https://leetcode.com/problems/design-linked-list/description/?utm_source
2. Perform different operations in double linked list
   https://leetcode.com/problems/design-linked-list/?utm_source
3. Circular Linked List
   https://www.codechef.com/practice/course/linked-lists/LINKLISTF/problems/PREP58?utm_source

UNIT – IV

Stacks: Introduction to stacks: properties and operations, implementing stacks using arrays and linked lists, applications of stacks.

Queues: Introduction to queues: properties and operations, Types of Queues, implementing queues using arrays and linked lists, applications of queues.

Practice:

1. Stack and its operations using arrays and Linked List
   https://www.hackerrank.com/challenges/balanced-brackets/problem
   https://leetcode.com/problems/design-linked-list/description/?utm_source
2. Implement a program to evaluate a postfix expression.
   https://leetcode.com/problems/evaluate-reverse-polish-notation/description/
3. Queue and its operations using arrays and Linked List
   https://leetcode.com/problems/implement-queue-using-stacks/description/
   https://leetcode.com/problems/design-linked-list/description/?utm_source
4. Implement Circular Queue using Arrays
   https://leetcode.com/problems/design-circular-queue/description/

UNIT – V

Non-linear Data Structures:

Trees: Difinition of tree, Tree Terminology, types of trees, Binary tree traversals, Binary Search Tree – Insertion, Deletion.

Graphs: Definition and Terminology – Representation of Graphs-Adjacency Matrix and Linked list, Graph Traversals (BFT & DFT)

Practice:

1. Implement Binary search tree (BST).
   https://leetcode.com/problems/insert-into-a-binary-search-tree/description/

https://leetcode.com/problems/delete-node-in-a-bst/description/

2. Implement Binary search Tree (BST) Traversals.
   https://www.hackerrank.com/challenges/tree-inorder-traversal/problem
   https://www.hackerrank.com/challenges/tree-preorder-traversal/problem
   https://www.hackerrank.com/challenges/tree-postorder-traversal/problem
3. Graph Traversal using Breadth First Search (BFS)
   https://www.hackerrank.com/challenges/bfsshortreach/problem
4. Graph Traversal using Depth First Search (DFS)
   https://leetcode.com/problems/number-of-islands/description/

Text Books:

1. Data Structures using C, Rema Theraja, Oxford University Press, 3rd Edition. ISBN: 978-9354979453
2. Data Structures, KV Sambasivarao, S Rama Sree, S.Chand. ISBN: 978-9358704730

Reference Books:

1. The Algorithm Design Manual, Steven S. Skiena, Springer Publication, Second Edition. ISBN: 978-1849967204
2. Fundamentals of data structures in C, Ellis Horowitz, Sartaj Sahni, Susan Anderson-Freed, Silicon Press, ISBN: 978-0716782506
3. Data Structures and Algorithms by Maganti Venkatesh, Naresh. ISBN: 9780929306407
4. Data Structures Using C, Reema Thareja, Oxford University Press, 2nd Edition. ISBN: 978-0198099307

Web Links:

1. https://nptel.ac.in/courses/106102064
2. https://archive.nptel.ac.in/courses/106/105/106105225/
3. https://www.udemy.com/topic/data-structures/
4. https://www.coursera.org/specializations/data-structures-algorithms
5. https://ds1-iiith.vlabs.ac.in/List%20of%20experiments.html

Additional Practice:

SNO	Difficulty	Problem Name	URL
1	Easy	Structs and enums	https://www.hackerrank.com/challenges/too-high-boxes/problem
2	Easy	Structs and enums	https://www.codechef.com/problems/HS08TEST?tab=statement
3	Medium	Structs and enums	https://www.hackerrank.com/challenges/small-triangles-large-triangles/problem

4	Easy	Arrays and Hashtables	https://leetcode.com/problems/two-sum/description/
5	Easy	Arrays and Pointers	https://leetcode.com/problems/remove-duplicates-from-sorted-array/description/?utm_source
6	Medium	Arrays and Pointers	https://leetcode.com/problems/two-sum-ii-input-array-is-sorted/description/?utm_source
7	Easy	Linked List	https://leetcode.com/problems/merge-two-sorted-lists/description/
8	Medium	Arrays and Matrix	https://leetcode.com/problems/diagonal-traverse/description/
9	Easy	Linked List	https://www.hackerrank.com/challenges/compare-two-linked-lists/problem
10	Medium	Stack applications	https://www.geeksforgeeks.org/problems/tower-of-hanoi-1587115621/1?utm
11	Medium	Binary Tree	https://leetcode.com/problems/binary-tree-right-side-view/description/
12	Medium	Stack applications	https://leetcode.com/problems/remove-k-digits/description/
13	Medium	Graph Theory	https://www.hackerrank.com/challenges/journey-to-the-moon/problem
14	Medium	Graph Traversals	https://leetcode.com/problems/number-of-provinces/description/
15	Medium	Graph Theory	https://www.hackerrank.com/challenges/torque-and-development/problem

	Basic Programs	**Aditya's Internal coding Platform(Maya)**	**Code chef**	**Hacker rank**	**Leet code**	**Geek for Geeks**
Unit-1	3	0	0	0	0	0
Unit-2	0	0	0	3	0	0
Unit-3	0	0	1	0	2	0
Unit-4	0	0	0	1	5	0
Unit-5	0	0	0	4	3	0
Additional Practice	0	0	1	5	8	1
Total	**3**	**0**	**2**	**13**	**18**	**1**

Data Structures using C++

(Common to EEE, ECE, CSE, AIML & CSE (DS))
(Revised Syllabus for batches admitted from 2026 Onwards)

	L	T	P	C
Course Code: 2601DS02	**2**	**0**	**2**	**4**

Course Outcomes:
At the end of the course, student will be able to:

CO1: Apply C++ features for problem solving.
CO2: Apply various sorting techniques to solve computing problems.
CO3: Make use of linear data structures to solve real time problems.
CO4: Develop applications using Tree data structures.
CO5: Solve problems using Graph algorithms.

Mapping of Course Outcomes with Program Outcomes:

CO/PO	PO 1	PO 2	PO 3	PO 4	PO 5	PO 6	PO 7	PO 8	PO 9	PO 10	PO 11
CO1	1	1	1					1	1		
CO2	1	1	2	2				1	1		
CO3	1	2	2	1				1	1		
CO4	1	1	2	1				1	1		
CO5	1	1	2	2				1	1		

Mapping of Course Outcomes with Program Specific Outcomes:

CO/PSO	PSO1	PSO2
CO1	2	-
CO2	2	-
CO3	2	-
CO4	2	-
CO5	2	-

UNIT – I

An Overview of C++: Structure of C++ program, Input and output in C++, Class, Objects,Members Functions, Access Specifiers, Introduction to Constructors and Destructor. **Overview of Standard Template Library:** Introduction, STL Programming Model, Containers, Sequence Containers, Associative Containers, Algorithms, Iterators, Vectors, Lists, Maps.

Practice:

1. Find the roots of a quadratic equation.
2. Find factorial of a given number using recursion
3. Palindrome Number
   https://leetcode.com/problems/palindrome-number/description/
4. Class and Objects
   https://www.hackerrank.com/challenges/classes-objects/problem?isFullScreen=true
5. Program to illustrate the use of Constructors and Destructors.

6. C++ Class Templates
   https://www.hackerrank.com/challenges/cpp-class-template-specialization/problem?isFullScreen=true

UNIT – II

Data Structures: Introduction to Data Structures, Types of Data Structures.
Linear Data Structures: Definition and importance of linear data structures, Abstract data types (ADTs) and their implementation.
Linked Lists: Singly linked lists: Representation and operations, Doubly linked lists and its operations and Circular linked lists and its operations, applications of linked list

Practice:

1. Single Linked List: Perform different operations in single linked list.
   https://leetcode.com/problems/design-linked-list/description/?utm_source
2. Perform different operations in double linked list
   https://leetcode.com/problems/design-linked-list/?utm_source
3. Circular Linked List
   https://www.codechef.com/practice/course/linked-lists/LINKLISTF/problems/PREP58?utm_source
4. Reversing a Linked List

UNIT – III

Stacks: Introduction to stacks: properties and operations, implementing stacks using arrays and linked lists, applications of stacks.
Queues: Introduction to queues: properties and operations, Types of Queues, implementing queues using arrays and linked lists, applications of queues.

Practice:

1. Stack and its operations using arrays and Linked List
   https://www.hackerrank.com/challenges/balanced-brackets/problem

   https://leetcode.com/problems/design-linked-list/description/?utm_source
2. Implement a program to evaluate a postfix expression.
   https://leetcode.com/problems/evaluate-reverse-polish-notation/description/
3. Queue and its operations using arrays and Linked List
   https://leetcode.com/problems/implement-queue-using-stacks/description/

   https://leetcode.com/problems/design-linked-list/description/?utm_source
4. Implement Circular Queue using Arrays
   https://leetcode.com/problems/design-circular-queue/description/

UNIT – IV

Trees: Definition of tree, Tree Terminology, Representation of tree, Types of trees-Binary Tree, BST, BST, Binary tree traversals-Inorder,Preorder,Postorder Traversals.

Binary Search Trees – Definition, Operations: Searching, Insertion, Deletion.

Practice:

1. Implement Binary search tree (BST).
   https://leetcode.com/problems/insert-into-a-binary-search-tree/description/
   https://leetcode.com/problems/delete-node-in-a-bst/description/
2. Implement Binary search Tree (BST) Traversals.
   https://www.hackerrank.com/challenges/tree-inorder-traversal/problem
   https://www.hackerrank.com/challenges/tree-preorder-traversal/problem

   https://www.hackerrank.com/challenges/tree-postorder-traversal/problem

UNIT – V

Graphs: Definition and Terminology, Types of Graph, Representation of Graphs-Adjacency Matrix and Adjaceny list, Graph Traversals (BFS & DFS), Bi-Connected Components.

Practice:

1. Graph Traversal using Breadth First Search (BFS)
   https://www.hackerrank.com/challenges/bfsshortreach/problem
2. Graph Traversal using Depth First Search (DFS)
   https://leetcode.com/problems/number-of-islands/description/

Text Books:

1. The Complete Reference C++, Herbert Schildt, TMH, Fourth Edition, ISBN-10. 0070411832.
2. Fundamentals of Data Structures in C++,Ellis Horowitz, Sartaj Sahni, DineshMehta, ISBN: 81-7515-278-8
3. Data Structures, KV Sambasivarao, S Rama Sree, S.Chand. ISBN: 978-9358704730

Reference Books:

1. The C++ Programming Language, Bjarne Stroustrup, Pearson, Fourth Edition,ISBN · 9780133522884.
2. Object oriented programming in C++, JoyceeFarrell,Cengage, ISBN : 978-1418836269
3. Data structures and algorithms in C++, 3rd edition, Adam Drozdek,Thomson, ISBN: 9788131521267
4. The Algorithm Design Manual, Steven S. Skiena, Springer Publication, Second Edition. ISBN: 978-1849967204
5. Data Structures and Algorithms by Maganti Venkatesh, Naresh. ISBN: 9780929306407

Web Links:

1. http://nptel.ac.in/courses/106105151/
2. https://nptel.ac.in/courses/106102064
3. https://archive.nptel.ac.in/courses/106/105/106105225/
4. https://www.udemy.com/topic/data-structures/

5. https://www.coursera.org/specializations/data-structures-algorithms
6. https://ds1-iiith.vlabs.ac.in/List%20of%20experiments.html

Additional Practice:

SNO	Difficulty	Problem Name	URL
1	Easy	Arrays and Hashtables	https://leetcode.com/problems/two-sum/description/
2	Easy	Arrays and Pointers	https://leetcode.com/problems/remove-duplicates-from-sorted-array/description/?utm_source
3	Medium	Arrays and Pointers	https://leetcode.com/problems/two-sum-ii-input-array-is-sorted/description/?utm_source
4	Easy	Linked List	https://leetcode.com/problems/merge-two-sorted-lists/description/
5	Medium	Arrays and Matrix	https://leetcode.com/problems/diagonal-traverse/description/
6	Easy	Linked List	https://www.hackerrank.com/challenges/compare-two-linked-lists/problem
7	Medium	Stack applications	https://www.geeksforgeeks.org/problems/tower-of-hanoi-1587115621/1?utm
8	Medium	Binary Tree	https://leetcode.com/problems/binary-tree-right-side-view/description/
9	Medium	Stack applications	https://leetcode.com/problems/remove-k-digits/description/
10	Medium	Graph Theory	https://www.hackerrank.com/challenges/journey-to-the-moon/problem
11	Medium	Graph Traversals	https://leetcode.com/problems/number-of-provinces/description/
12	Medium	Graph Theory	https://www.hackerrank.com/challenges/torque-and-development/problem

	Basic Programs	Code chef	Hacker rank	Leet code	Geek for Geeks
Unit-1	3	0	2	1	0
Unit-2	0	1	3	2	0
Unit-3	0	0	1	5	0
Unit-4	0	0	3	2	0
Unit-5	0	0	1	1	0
Additional Practice	0	0	3	8	1
Total	3	1	13	19	1

Engineering Economics & Management

(Common to CE,EEE, ME, ECE,CSE, IT, AIML, CSE(DS), PT&Min.E)

	L	T	P	C
Course Code:2501MB01	**2**	**0**	**0**	**2**

Course Outcomes:

At the end of the Course, Student will be able to:

CO1: Explain the Business Economic concepts, law of demand and forecasting methods.

CO2: Identify the production, cost behavior for managerial decision making with Break Even Point (BEP).

CO3: Make use of financial accounting and capital budgeting techniques for decision making.

CO4: Summarize management and motivational theories to renovate the practice of Management.

CO5: Illustrate the functional management and project management using PERT and CPM.

Mapping of Course Outcomes with Program Outcomes:

CO/PO	PO 1	PO 2	PO 3	PO 4	PO 5	PO 6	PO 7	PO 8	PO 9	PO 10	PO 11
CO1	-	-	-	-	-	-	-	-	2	2	-
CO2	1	-	-	-	-	-	-	-	-	-	2
CO3	-	-	-	-	-	-	-	-	-	-	3
CO4	1	-	-	-	-	-	-	-	1	1	2
CO5	-	-	-	-	-	-	-	-	-	-	3

Mapping of Course Outcomes with Program Specific Outcomes:

CO/PSO	PSO1	PSO2
CO1	-	-
CO2	-	-
CO3	-	-
CO4	-	-
CO5	-	-

UNIT – I

Introduction to Managerial Economics And Demand Analysis:

Definition of Managerial Economics –Scope of Managerial Economics- Concept of Demand, Types of Demand, Determinants of Demand- Law of Demand and its limitations- Elasticity of Demand, Types- Demand forecasting and its Methods.

UNIT – II

Production and Cost Analyses:

Concept of Production function Law of Variable Proportions-Isoquants and Isocosts Producer Equillibrium-, cost concepts: opportunity costs, explicit and implicit costs- Fixed costs, Variable Costs – Cost –Volume-Profit Analysis-Determination of Breakeven point (simple problems).

UNIT – III

Introduction to Markets And Financial Accounting:

Market Structures-Classification of markets,.Introduction to Financial Accounting , Concepts and conventions, Accounting cycle, Journal entries and Ledger (Simple Problems), Methods of capital budgeting (Simple Problems).

UNIT – IV

Operations Management :

Concept nature and importance of Management, Generic Functions of Management, Theories of Motivation, Plant location and layout, Principles of organization,SWOT analysis.

Material Management: Need for Inventory control, EOQ, ABC analysis

UNIT – V

Functional Management and Project Management:

Concept of HRM , HRD and PMIR, Functions of HR Manager , Job Evaluation and Merit Rating , Marketing Management, Functions of Marketing , Channels of distributions - Development of Network , Difference between PERT and CPM, Finding Critical Path (Simple Problems).

Text Books:

1. Managerial Economics and Financial Analysis, Dr. A. R. Aryasri, TMH, ISBN 9780070078031

2. Managerial Economics and Financial Analysis, Dr. N. Appa Rao, Dr. P. Vijay Kumar, Cengage Publications, New Delhi, ISBN 978-8131515952

Reference Books:

1. Principles of Marketing: A South Asian Perspective by Kotler Philip, Gary Armstrong, Prafulla Y. Agnihotri, and Eshan ul Haque, Pearson Education/Prentice Hall of India, 13th Edition, ISBN 9788131731017

2. A Handbook of Human Resource Management Practice, Michael Armstrong Kogan, Page Publishers, ISBN 978-1789661033

3. Management Science, Aryasri, Tata McGraw Hill, ISBN 978-0070090279

4. Management, James Arthur, Finch Stoner, R. Edward Freeman, and Daniel R. Gilbert Pearson Education/Prentice Hall, 6th Edition, ISBN 978-0131087477

Web Links:

1. https://nptel.ac.in/courses/110105067

2. https://archive.nptel.ac.in/courses/112/107/112107143/

Ability Enhancement Courses (AEC)

Course Code	Course Name	Level	L	T	P	C	CIE	SEE	Total	Pre-requisite
2501EN01	Essential Cognitive Skills for Engineering	FC			1	1	100	-	100	-
2501EN02	Advanced Cognitive Skills for Engineering	FC			1	1	100	-	100	-
2501UC07	Design Thinking using AI	FC			1	1	100	-	100	-
2501UC08	Universal Human Values	FC	2			2	100	-	100	-
2501UC09	Technical Paper Publication	AC			2	2	100	-	100	-
2501EC96	Student Activity Based Learning	AC				2	100	-	100	-
Total			**2**		5	**9**				

ESSENTIAL COGNITIVE SKILLS FOR ENGINEERS

(Common to CE, EEE, ME, ECE, CSE, IT, AIML, CSE(DS), PT & Min.E)

	L	T	P	C
Course Code:2501EN01	**0**	**0**	**1**	**1**

Course Outcomes:

At the end of the course, student will be able to:

CO1: Recognize the different aspects of the English language proficiency with emphasis on LSRW skills.

CO2: Apply communication skills through various language learning activities

CO3: Analyze the English speech sounds, stress, intonation and syllable division for better listening and speaking comprehension.

CO4: Enable them to learn and apply fundamentals of English grammar concepts for improved language

CO5: Make use of various types of vocabulary in different academic and professional careers

Mapping of Course Outcomes with Program Outcomes:

CO/PO	PO1	PO2	PO3	PO4	PO5	PO6	PO7	PO8	PO9	PO10	PO11
CO1	-	-	-	-	-	-	-	-	3	-	-
CO2	-	-	-	-	-	-	-	-	3	-	-
CO3	-	-	-	-	-	-	-	-	3	-	-
CO4	-	-	-	-	-	-	-	-	3	-	-
CO5	-	-	-	-	-	-	-	-	3	-	-

Practice:

UNIT-I **Outstanding people A/B/C/D**

Listening	Conversation about Jocelyn Bell- Burnell, Podcast: The 30-day challenge, Starting a new job, Conversation about technology
Speaking	Discussing inspiring people, Asking and answering questions about challenges, Explaining a process; Checking understanding, Discussing technology.
Reading	Articles: *Protector of the sea and The woman who reinvented children's TV,* Interviews*: 30-day challenge,* Article: *Tech free!*
Writing	Article Organizing an article
Grammar	Review of Tenses, Questions
Vocabulary	Character adjectives, trying and succeeding
Pronunciation	The letter e; Word stress, Rapid speech.

UNIT-II	**Survival A/B/C/D**
Listening	Conversation about a survival situation, Interview: The Tiger, Cooking for a friend, Talking about getting lost
Speaking	Telling a survival story, Giving advice; Asking questions, Giving compliments and responding, Discussing the natural environment
Reading	Article: Lost at sea, Leaflet: *How to survive…an animal attack*, Leaflet: *Be wise and survive*
Writing	Guidelines, organizing guidelines in a leaflet
Grammar	Narrative tenses, Future time clauses and conditionals
Vocabulary	Expressions with *get,* Animals and the environment
Pronunciation	Sound and Spelling: g, Intonation in question tags

UNIT–III	**Talent A/B/C/D**
Listening	Conversation: learning experiences, Radio Programme: The sports gene, Making wedding plans, Interviews about sport
Speaking	Talking about something you have put a lot of effort into, Discussing sport and ways to improve performance, planning a party, Talking about popular sports
Reading	Text about learning; *Learning to learn*, Article: *Born to be the best*; Three articles about athletes, Article: *Fitness: Seattle snapshot*
Writing	Article describing data
Grammar	Multi-word verbs, Present perfect and present perfect continuous
Vocabulary	Ability and achievement, word connected with sport
Pronunciation	Word stress, sound and spelling consonant sounds

UNIT–IV	**Life Lessons A/B/C/D**
Listening	Interview: Psychology of money; Two monologues: Life-changing events, Two monologues; training for a job, Presenting photos, Three monologues; living in different places
Speaking	Talking about how your life has changes, Discuss experiences of training and rules, Describing photos: Expressing careful disagreement, Discussing living in a different country
Reading	Two texts about life-changing events that helped people become rich, Article: *Training for the emergency frontline,* Advert for being an international student 'buddy'
Writing	Job application, Giving a positive impression
Grammar	*Used to* and *would*
Vocabulary	Cause and result, Talking about difficulty
Pronunciation	Sound and spelling: *u*

UNIT–V Chance A/B/C/D

Listening	Monologue: What are your chances?, Conversation: Talking about work, Money problems, News reports: environmental problems
Speaking	Discussing possible future events, Role Play: job interview, Explaining and responding to an idea for a café, Giving opinions on environmental problems
Reading	Quiz: *Are you an optimist or a pessimist?; Article: Why we think we're going to have a long and happy life*, Quiz: *The unknown continent*; Article: *Cooking in Antarctica*, Essay about protecting the environment
Writing	For and against essay, Arguing for and against an idea
Grammar	Future probability, Future perfect and future continuous
Vocabulary	Adjectives describing attitude, The natural world
Pronunciation	Sound and spelling : *th,* Intonation groups

Text Book:

1. Cambridge Empower – Second Edition B2 Level - Adrian Doff, Craig Thaine, Herbert Puchta, Jeff Stranks, Peter Lewis – Jones, ISBN: 978-1107468726.

SuggestedSoftware:

- Cambridge Empower
- Soft X (K-Van Solutions)

Reference Books:

1. M Ashraf Rizvi: Effective Technical Communication, ISBN: 9352605780.
2. Raymond Murphy: English Grammar in Use, Cambridge University Press. Fifth Edition,ISBN: 978-3125354241.
3. J. Sethi & P.V. Dhamija. A Course in Phonetics and Spoken English, (2nd Ed), Kindle, ISBN: 9788120314955.

Weblinks:

1. https://www.cambridgeone.org/login
2. https://www.britishcouncil.in/english/online
3. www.englishmedialab.com

Advanced Cognitive Skills For Engineers

(Common to CE, EEE, ME, ECE, CSE, IT, AIML, CSE(DS), PT & Min.E)

	L	T	P	C
Course Code: 2501EN02	**0**	**0**	**1**	**1**

Course Outcomes:

At the end of the course, student will be able to:

CO1: Recognize the basics of communication and summarize formal and informal language expressions in all aspects.

CO2: Establish and maintain interpersonal relationships and transmit the message through different language activities.

CO3: Use language effectively to prepare and demonstrate proficiency in facing various types of interviews.

CO4: Demonstrate and exhibit professionalism in participating in various public speaking activities like debates, group discussions and presentation skills.

CO5: Identify the basic elements of writing and apply the fundamentals to compose e-mails catering to different professional needs.

Mapping of Course Outcomes with Program Outcomes:

CO/PO	PO 1	PO 2	PO 3	PO 4	PO 5	PO 6	PO 7	PO 8	PO 9	PO 10	PO 11
CO1	-	-	-	-	-	-	-	-	3	-	-
CO2	-	-	-	-	-	-	-	-	3	-	-
CO3	-	-	-	-	-	-	-	-	3	-	-
CO4	-	-	-	-	-	-	-	-	3	-	-
CO5	-	-	-	-	-	-	-	-	3	-	-

Practice

UNIT – I Around the globe A/B/C/D

Listening	Two monologues about sightseeing tours, Interview: disappearing languages, Asking for a favour, conversation: a trip to the Grand Canyon
Speaking	Comparing different tourist destinations, Agreeing and disagreeing, Asking for a favour, Discussing local tourist destinations.
Reading	Website bout four tourist destinations; Website: *Where to go?*
Writing	Travel blog, Using descriptive language
Grammar	Infinitives and *–ing* forms
Vocabulary	Travel and tourism, Describing changes
Pronunciation	Consonant clusters, Consonant sounds

UNIT – II **City living A/B/C/D**

Listening	Interview: 'Smart' cities: Two monologues talking about 'smart' cities, Two monologues: house renovations, Flat hunting, Interviews about a new shopping centre
Speaking	Discussing good and bad points about a city
Reading	Article: *Quick-slow down!*, Article: *Who puts the 'real' in reality* TV? Email: Complaining about an important issue.
Writing	Email of complaint, Using formal language
Grammar	*Too/enough; so/such*, Causative *have/get*
Vocabulary	Describing life in cities, Film and TV; Houses
Pronunciation	Sound and spelling: o, Stress in compound nouns

UNIT – III **Dilemmas A/B/C/D**

Listening	Radio programme: person finance, Three monologues about honesty, Going to the bank, Conversation about a TV programme
Speaking	Giving opinions on financial matters, Discussing moral dilemmas, Talking about hopes and worries Discussing programmes about crime
Reading	Article: *Is it time to give up on cash?*, Newspaper article: *The honesty experiment*, Review: *Crime with a smile*
Writing	Review, Organising a review
Grammar	First and second conditionals, Third conditional; *should have+past participle*
Vocabulary	Money and finance, Crime
Pronunciation	Stressed and unstressed words; Sound and spelling: *l,* Word groups

UNIT – IV **Discoveries A/B/C/D**

Listening	Conversation about inventions, Conversation about an email hoax, Finding the perfect flat, Four monologues about alternative medicine
Speaking	Talking about inventions, Describing a hoax or a scam or a case of fraud, Giving and receiving surprises
Reading	Article: *Too good to be true?*, Article: *The rise and fall of Barry Minkow,* Essay: *The Value of alternative medicine*
Writing	Opinion essay, Presenting a series of arguments
Grammar	Relative clauses, Reported speech; Reporting verbs
Vocabulary	Health, Verbs describing thought and knowledge
Pronunciation	Sound and spelling : *ui*, Linking and intrusion

UNIT – V Possibilities A/B/C/D

Listening	Interview about Dan Cooper, Two monologues: pursuing a dream, Celebrating good news, conversation about goals
Speaking	Telling stories about coincidences, Describing and comparing brave or amazing people, Telling an important piece of news, Talking about performing
Reading	Story: The man who disappeared; Blog: *The Wreck of the Titan*, Article: *Dream to help*, Story: Rosa's diary: *The ultimate goal*
Writing	Story, Making a story interesting
Grammar	Past modals of deduction, Wishes and regrets
Vocabulary	Adjectives with prefixes, Verbs of effort
Pronunciation	Word stress, Linking, Consonant clusters

Text Book:

1. Cambridge Empower – Second Edition B2 Level - Adrian Doff, Craig Thaine, Herbert Puchta, Jeff Stranks, Peter Lewis – Jones, ISBN: 978-1107468726.

Suggested Software:

- Cambridge Empower
- Soft X (K-Van Solutions)

Reference Books:

1. Raman Meenakshi, Sangeeta-Sharma. Technical Communication. Oxford University Press.2018, ISBN: 9789354972256
2. Michael Swan- Practical English Usage,ISBN: 9780194202466.
3. Taylor Grant: English Conversation Practice, Tata McGraw-Hill Education India,ISBN: 978-0070996038.

Weblinks:

1. **https://www.cambridgeone.org/login**
2. https://www.coursera.org/
3. https://www.skillshare.com/
4. https://www.mindtools.com/cawh8bu/communication-tools

Design Thinking using AI

(Common to CE, EEE, ME, ECE, CSE, IT, AIML, CSE(DS), PT & Min.E)

	L	T	P	C
Course Code:2501UC07	**0**	**0**	**1**	**1**

Course Outcomes:

At the end of the course, student will be able to:

CO1: Appreciate various design process procedure.
CO2: Generate and develop design ideas through different technique.
CO3: Identify the significance of reverse Engineering to Understand products.
CO4: Draw technical drawing for design ideas.
CO5: Illustrate design teams to create feasible and user-focused solutions to complex problems in design.

Mapping of Course Outcomes with Program Outcomes:

CO/PO	PO 1	PO 2	PO 3	PO 4	PO 5	PO 6	PO 7	PO 8	PO 9	PO 10	PO 11
CO1	-	-	-	-	-	-	-	2	2	-	-
CO2	-	-	-	-	-	-	-	-	-	2	-
CO3	-	-	-	-	-	-	-	-	-	3	-
CO4	-	-	-	-	-	-	-	1	1	2	-
CO5	-	-	-	-	-	-	-	-	-	3	-

UNIT – I

Process of Design Understanding Design thinking: Shared model in team-based design – Theory and practice in Design thinking – Explore presentation signers across globe – MVP or Prototyping.

UNIT – II

Tools for Design Thinking: Real-Time design interaction capture and analysis – Enabling efficient collaboration in digital space – Empathy for design – Collaboration in distributed Design

Practice using any AI tool:

Students are advised to use any AI tool like Otter AI etc for Transcribe interviews automatically and summarize user insights.

UNIT – III

Design Thinking in IT: Design Thinking to Business Process modelling – Agile in Virtual collaboration environment – Scenario based Prototyping

Practice using any AI tool:

Students are advised to use any AI tool like ChatGPT,Claude, Perplexity etc to define, synthesize, ideate and prototype.

UNIT – IV

DT For strategic innovations: Growth – Story telling representation – Strategic Foresight - Change – Sense Making - Maintenance Relevance – Value redefinition - Extreme Competition – experience design.

Practice using any AI tool:

Students are advised to use any AI tool like looka,logomkr,canva and figma etc for logo,prototyping and sketching.

UNIT – V

Design thinking workshop: Design Thinking Work shop Empathize, Design, Ideate, Prototype and Test.

Text Books:

1. Engineering Design byJohn.R.Karsnitz, Stephen O'Brien and John P. Hutchinson, Cengage learning (International edition) Second Edition, ISBN: 9781133708766.
2. The Design of Business: Why Design Thinking is the Next Competitive Advantage Roger Martin by Harvard Business Press, ISBN: 9781422177808

Reference Books:

1. Engineering Design Process by Yousef Haik and Tamer M.Shahin, Cengage Learning, Second Edition, ISBN: 978-8131529041.
2. Solving Problems with Design Thinking - Ten Stories of What Works (Columbia Business School Publishing) Hardcover – Jeanne Liedtka (Author), Andrew King (Author), Kevin Bennett (Author), ISBN: 978-0231163569.

Web Links:

1. www.tuto2.u.net/business/presentations/. /Product lifecycle/default.html
2. https://docs.oracle.com/cd/E11108_02/otn/pdf/. /E11087_01.pdf

Universal Human Values

(Common to CE, EEE, ME, ECE, CSE, IT, AIML, CSE(DS), PT & Min.E)

	L	T	P	C
Course Code: 2501UC08	**1**	**1**	**0**	**2**

Pre Requisites: Universal Human Values (UHV-I) (desirable).

Course Objectives:

This course input is intended

1. To help the students appreciate the complementarity between 'VALUES' and 'SKILLS' and understand how ethical foundations enhance technical competence to achieve sustainable happiness, prosperity, and responsible professional growth.
2. To develop a Holistic perspective among students towards life and profession as well as towards happiness and prosperity based on a right understanding of the Human reality and the rest of Existence. Such a holistic perspective forms the basis of Universal Human Values (UHV) and movement towards value-based living in a natural way.
3. To highlight real-world implications of Holistic understanding of ethical human conduct, trustful and mutually fulfilling human behaviour and mutually enriching interaction with Nature.
4. To encourage the students to realise their full potential and act accordingly.
5. To assist the students to live with a feeling of relationship, harmony and co-existence.

Thus, this course is intended to provide a much-needed input in value education to the young enquiring minds.

UNIT I INTRODUCTION TO VALUE EDUCATION

Lecture 1: Holistic Development and the Role of Education (Right Understanding, Relationship and Physical Facility)
Lecture 2: Understanding Value Education
Tutorial 1: Practice Session PS1 - Sharing about Oneself
Lecture 3: Self-Exploration as the Process for Value Education
Lecture 4: Continuous Happiness and Prosperity – the Basic Human Aspirations
Tutorial 2: Practice Session PS2 - Exploring Human Consciousness
Lecture 5: Happiness and Prosperity – Current Scenario
Lecture 6: Method to Fulfill the Basic Human Aspirations
Tutorial 3: Practice Session PS3 - Exploring Natural Acceptance.

UNIT II HARMONY IN THE HUMAN BEING

Lecture 7: Understanding Human being as the Co-existence of the self and the body
Lecture 8: Distinguishing between the Needs of the self and the body
Tutorial 4: Practice Session PS4 - Exploring the difference of Needs of self and body
Lecture 9: The body as an Instrument of the self
Lecture 10: Understanding Harmony in the self
Tutorial 5: Practice Session PS5 - Exploring Sources of Imagination in the self
Lecture 11: Harmony of the self with the body
Lecture 12: Programme to ensure self-regulation and Health
Tutorial 6: Practice Session PS6 - Exploring Harmony of self with the body.

UNIT III HARMONY IN THE FAMILY AND SOCIETY

Lecture 13: Harmony in the Family – the Basic Unit of Human Interaction
Lecture 14: 'Trust' – the Foundational Value in Relationship
Tutorial 7: Practice Session PS7 - Exploring the Feeling of Trust
Lecture 15: 'Respect' – as the Right Evaluation
Tutorial 8: Practice Session PS8 - Exploring the Feeling of Respect
Lecture 16: Other Feelings, Justice in Human-to-Human Relationship
Lecture 17: Understanding Harmony in the Society
Lecture 18: Vision for the Universal Human Order
Tutorial 9: Practice Session PS9 - Exploring Systems to fulfil Human Goal

UNIT IV HARMONY IN THE NATURE/EXISTENCE

Lecture 19: Understanding Harmony in Nature
Lecture 20: Interconnectedness, self-regulation and Mutual Fulfilment among the Four Orders of Nature
Tutorial 10: Practice Session PS10 - Exploring the Four Orders of Nature
Lecture 21: Realizing Existence as Co-existence at All Levels
Lecture 22: The Holistic Perception of Harmony in Existence
Tutorial 11: Practice Session PS11 - Exploring Co-existence in Existence.

UNIT V IMPLICATIONS OF THE HOLISTIC UNDERSTANDING A LOOK AT PROFESSIONAL ETHICS

Lecture 23: Natural Acceptance of Human Values
Lecture 24: Definitiveness of (Ethical) Human Conduct
Tutorial 12: Practice Session PS12 - Exploring Ethical Human Conduct
Lecture 25: A Basis for Humanistic Education, Humanistic Constitution and Universal Human Order
Lecture 26: Competence in Professional Ethics
Tutorial 13: Practice Session PS13 - Exploring Humanistic Models in Education
Lecture 27: Holistic Technologies, Production Systems and Management Models-Typical Case Studies Lecture 28: Strategies for Transition towards Value-based Life and Profession
Tutorial 14: Practice Session PS14 - Exploring Steps of Transition towards Universal Human Order

Course Outcomes:

Upon successful completion of the course, students will be able to

CO1: Demonstrate an understanding of basic human aspiration and the concept of Natural Acceptance and apply them in personal and professional decision-making.
CO2: Develop self-awareness and practice self-regulation.
CO3: Recognize human-human relationship (Justice) and identify human goals in society.
CO4: Appreciate the harmony in nature and existence.
CO5: Develop as socially and ecologically responsible engineers in handling problems with sustainable solutions (user-friendly and eco-friendly).

Text Books:

1. R R Gaur, R Asthana, G P Bagaria, *A Foundation Course in Human Values and Professional Ethics*, 3rd Revised Edition, UHV Publications, Sarva Shubha Nyas, Kanpur, 2023. ISBN: 978- 81-957703-7-3 (Printed Copy) ISBN: 978-81-957703-6-6 (e-book)
2. R R Gaur, R Asthana, G P Bagaria, *Teachers' Manual for a Foundation Course in Human Values and Professional Ethics,* 3rd Revised Edition, UHV Publications, Sarva Shubha Nyas, Kanpur, 2023.

Reference Books:

1. *Jeevan Vidya: Ek Parichaya,* A Nagaraj, Jeevan Vidya Prakashan, Amarkantak, 1999
2. *Human Values*, A.N. Tripathi, New Age Intl. Publishers, New Delhi, 2004.
3. *The Story of Stuff* (Book), Annie Leonard, Free Press, 2010.
4. .*The Story of My Experiments with Truth*, Mohandas Karamchand Gandhi, Fingerprint! Publishing
5. *Small is Beautiful* - E. F Schumacher, Random House, 2011.
6. *Slow is Beautiful* - Cecile Andrews, New Society Publishers, 2006
7. *Economy of Permanence* - J C Kumarappa
8. *Vivekananda* - Romain Rolland

Online Resources

1. https://fdp-si.aicte-india.org/index.php
2. https://onlinecourses.swayam2.ac.in/aic22_ge23/preview
3. https://uhv.org.in/
4. https://www.youtube.com/@UniversalHumanValues/playlists

Skill Enhancement Courses (SEC)

Course Code	Course Name	Level	L	T	P	C	CIE	SEE	Total	Pre-requisite
2501EC21	PCB Design	FC			2	2	50	50	100	-
2501EC94	Soft Computing Tools	IC			2	2	50	50	100	-
2501CS90	Object Oriented Programming through JAVA	AC			2	2	50	50	100	-
2501EC16	ECAD Tools	AC			2	2	50	50	100	VLSI
2501EC17	Verification using Verilog & UVM	AC			2	2	50	50	100	VLSI
Total					**10**	**10**				

Skill Enhancement Courses (SEC)

PCB Design

	L	T	P	C
Course Code:2501EC21	**0**	**0**	**2**	**2**

Course Outcomes:

At the end of the course, student will be able to:

CO1: Illustrate the equipment and components used in PCB design.
CO2: Apply the procedural steps for PCB preparation.
CO3: Make use of chemicals for Etching process.
CO4: Make use of Soldering gun for components mounting.
CO5: Construct PCB for different circuits.

Mapping of Course Outcomes with Program Outcomes:

CO/PO	PO 1	PO 2	PO 3	PO 4	PO 5	PO 6	PO 7	PO 8	PO 9	PO 10	PO 11
CO1	3	2	-	-	-	-	-	2	2	-	1
CO2	2	2	-	-	-	-	-	2	2	-	1
CO3	2	2	-	-	-	-	-	2	2	-	1
CO4	2	2	-	-	-	-	-	2	2	-	1
CO5	2	2	2	-	-	-	-	2	2	-	1

Mapping of Course Outcomes with Program Specific Outcomes:

CO/PSO	PSO1	PSO2
CO1	-	1
CO2	-	1
CO3	-	1
CO4	-	1
CO5	-	1

Practice:

1. Study of LaboratoryEquipments and Electronic components: (1 Week)
   a) CRO
   b) Digital Multimeter
   c) Function Generator
   d) Regulated Power Supply
   e) Active Components (Diode, BJT, ICs)
   f) Passive Components (Resistors, Capacitors, Inductors)
   g) Breadboard
   h) Soldering Gun
   i) Sensors
2. Study of PCB Design and Fabrication Using Autodesk EAGLE Tool and Toner Transfer (Ironing) Method (1 Week)
   a) Schematic Design in EAGLE software
   b) PCB Layout Design
   c) Artwork Generation

d) Toner Transfer (Ironing) Method
e) Etching and Drilling of PCB.
f) Component Mounting & Soldering
g) Continuity Check & Testing

List of Experiments:

1. Design, Fabrication and Verification of PCB for Diode as a Switch Circuit (2 Weeks)
2. Design, Fabrication and Verification of PCB for Bridge Rectifier Circuit (2 Weeks)
3. Design, Fabrication and Verification of PCB for Transistor as a Switch Circuit (1 Week)
4. Design, Fabrication and Verification of PCB for Common Emitter (CE) Amplifier (2 Weeks)
5. Design, Fabrication and Verification of PCB for Astable Multivibrator Using IC 555 (2 Weeks)
6. Design, Fabrication and Verification of PCB for 4-Bit Up Counter Using IC 74×393 (1 Week)

Cornerstone Projects:

1. **Touch-Based ON/OFF Switch**

   Description: Design and fabricate a touch switch circuit using a touch sensor / transistor logic to turn a load ON or OFF by human touch. Implement the circuit on a PCB.

   Expected Outcome: A working PCB-based touch switch that toggles output on every touch.

2. **Automatic Night Lamp using LDR**

   Description: Design and fabricate an automatic night lamp circuit using an LDR to sense ambient light and a transistor/driver stage to switch an LED/lamp ON in darkness and OFF in daylight. Set the switching level using a preset/potentiometer and implement the complete circuit on a PCB.

   Expected Outcome: A working PCB-based night lamp that turns ON automatically at low light and OFF automatically in bright light, with proper demonstration and explanation of LDR sensing and switching operation.

3. **Clap-Activated Relay Switch**

   Task Description: Design and fabricate a clap-activated relay switch using a microphone sensor, signal conditioning stage, and a 555 timer to toggle a relay when a clap sound is detected. Implement the complete circuit on a PCB.

   Expected Outcome: A working PCB-based clap switch in which the relay turns ON/OFF with each clap, suitable for controlling a small load, and students are able to explain the sensing, triggering, and relay operation during viva.

4. **Water Level Indicator with Buzzer**

   Description: Design and fabricate a water level indicator using level sensing probes and a simple transistor/IC-based switching circuit to detect water at preset levels and activate a buzzer/LED indication. Implement the complete circuit on a PCB.

   Expected Outcome: A working PCB-based water level indicator that gives a clear alarm/indication when water reaches the selected level(s), and students are able to explain the sensing method and buzzer operation.

5. **Rain Alarm Indicator**

   Description: Design and fabricate a rain alarm circuit using a rain sensor/probe plate to detect water droplets and a transistor/driver stage to activate a buzzer/LED alert. Implement the complete circuit on a PCB.

   Expected Outcome: a working PCB-based rain alarm that gives an alarm indication when rain is detected and students are able to explain the sensing and switching operation.

6. **Fire Alarm Indicator**

   Description: Design and fabricate a fire alarm circuit using a temperature sensor / thermistor to detect abnormal heat levels and a transistor/IC-based switching stage to activate a buzzer/LED alert. Implement the complete circuit on a PCB.

   Expected Outcome: A working PCB-based fire alarm that produces an alarm indication when high temperature is detected, and students are able to explain the sensing and alarm operation.

7. **IR-Based Object Detection Alarm**

   Description: Design and fabricate an IR object detection alarm using an IR transmitter and IR receiver to sense the presence of an object and a driver stage to activate a buzzer/LED alert. Implement the complete circuit on a PCB.

   Expected Outcome: A working PCB-based IR alarm that gives an alert when an object is detected, and students are able to explain the IR sensing and switching operation.

8. **Invisible Burglar Alarm**

   Description: Design and fabricate an invisible burglar alarm using an infrared beam pair (IR transmitter and receiver) placed across an entry path. Interruption of the invisible beam triggers a driver circuit to activate a buzzer/LED alert. Implement the complete circuit on a PCB.

Expected outcome: A working PCB-based invisible burglar alarm that gives an alert when the IR beam is interrupted and students are able to explain the beam sensing and alarm operation.

9. **Electronic Dice**

   Description: Design and fabricate an electronic dice circuit using a 555 timer / clock generator and counter or logic ICs to generate random numbers from 1 to 6, which are displayed using LEDs or 7-segment display. Implement the complete circuit on a PCB.

   Expected Outcome: A working PCB-based electronic dice that displays a random number between 1 and 6 on each trigger, and students are able to explain the clocking, counting, and display operation.

10. **Simple Audio Amplifier**

    Description: Design and fabricate a simple audio amplifier using a transistor or audio amplifier IC to amplify a low-level audio signal from a microphone to drive a speaker. Implement the complete circuit on a PCB.

    Expected Outcome: A working PCB-based audio amplifier that produces a clear and audible output sound and students are able to explain the amplification principle and circuit operation.

11. **Wireless Call Bell**

    Description: Design and fabricate a wireless call bell system with a transmitter unit (push button + RF module) and a receiver unit (RF module + buzzer/indicator). When the button is pressed at the transmitter, the receiver activates the bell/buzzer. Implement the circuit on a PCB.

    Expected Outcome: A working PCB-based wireless call bell in which pressing the transmitter button produces a clear buzzer/alert at the receiver, and students are able to explain the transmitter–receiver operation and working during viva.

12. **LED Chaser Circuit using 555 Timer and CD4017**

    Description: Design and fabricate an LED chaser circuit using a 555 timer to generate clock pulses and a CD4017 counter to switch LEDs sequentially. Control the chasing speed using RC components or a potentiometer and implement the complete circuit on a PCB.

    Expected Outcome: A working PCB-based LED chaser in which LEDs glow one after another with adjustable speed, and students are able to explain the working of the 555 timer and CD4017.

Note:

- The cornerstone project team size shall be four (4) students.
- Students may select any one of the above prescribed projects or a project of their own choice with the prior permission of the Course instructor.
- The evaluation of the Cornerstone Project shall be based on the project implementation, oral presentation, 10-minute video presentation, report and viva voce.
- The video presentation should consist of the working procedure of the project along with contribution of each student for a minimum of 2 minutes.
- Finally, the Source code of the cornerstone Project has to be pushed into the Students GitHub repository (if applicable).

Reference Books:

1. Printed Circuits Handbook,Clyde F. Coombs Jr., Happy T. Holden, Seventh Edition, McGraw Hill publications, ISBN: 978-0071833950.
2. PCB Design and Layout Fundamentals for EMC, RogerHu, 2019, ISBN:978-1082079252.
3. The Hitchhiker's Guide to PCB Design, David Ruff, Mike Brown, Cadence Documents, ISBN:978-0368246968.

Web Links:

1. http://www.nptelvideos.com/lecture.php?id=14721 by Prof. Santhanu Bhattacharya, IIT, Kanpur

Soft Computing Tools

	L	T	P	C
Course Code: 2501EC94	**0**	**0**	**2**	**2**

Course Outcomes:

At the end of the Course, Student will be able to:

CO1: Perform basic matrix operations and random data manipulation using MATLAB.
CO2: Make use of MATLAB to generate Gaussian noise and compute its basic statistical measures.
CO3: Design filters with the help of Simulink toolbox.
CO4: Apply the concepts of convolution and filters to remove noise.
CO5: Utilize the Fuzzy tool box to perform different operations

Mapping of Course Outcomes with Program Outcomes

CO/PO	PO 1	PO 2	PO 3	PO 4	PO 5	PO 6	PO 7	PO 8	PO 9	PO 10	PO 11
CO1	3	2			2			2	2		1
CO2	2	2			2			2	2		1
CO3	2	2			2			2	2		1
CO4	2	2			2			2	2		1
CO5	2	2			2			2	2		1

Mapping of Course Outcomes with Program Specific Outcomes:

CO/PSO	PSO1	PSO2
CO1	1	
CO2	1	
CO3	1	
CO4	2	
CO5	1	

Practice:

1. Create a 10x10 random matrix with the command A= rand (10). Now do the following operations.
   a. Multiply all elements by 100 and then round off all elements of the matrix to integers with the command A=fix(A).
   b. Replace all elements of A<10 with Zeros.
   c. Replace all elements of A>90 with infinity (int).
   d. Extract all $30 \leq a_{ij} \leq 50$ in a vector b, that is find all elements between 30 and 50 and put them in a vector b.
2. Generation of Gaussian noise (Real and Complex), Computation of its mean, Variance, Mean Square Value and Probability Distribution Function.
3. Removal of noise by Autocorrelation / Cross correlation.

4. Removal of noise by Filters (Wiener/LMS).
5. Introduction to Simulink toolbox
6. Design of Filters using Simulink (LPF, HPF, BPF, BRF)
7. Introduction to Fuzzy Logic toolbox
8. Write a program in MATLAB to perform Union, Intersection and Complement operations.
9. Write a program using Fuzzy Logic to perform arithmetic and Logic Operations
10. Write a program in MATLAB to implement De-Morgan's Law.
11. Write a program in MATLAB to plot various membership functions.
12. Implement Fuzzy Inference System (FIS)

Additional Practice:

1. Identify a relevant problem in your domain and develop an appropriate solution using the Simulink toolbox, applying the knowledge you have gained so far.
2. Identify a relevant problem in your domain and develop an appropriate solution using the Fuzzy Logic toolbox, applying the knowledge you have gained so far.

Web Links:

1. Soft Computing Tools in Engineering (iitkgp.ac.in)

Object Oriented Programming through JAVA
(ECE)

	L	T	P	C
Course Code: 2501CS90	**0**	**0**	**2**	**2**

Course Outcomes:

At the end of the course, student will be able to:

CO1: Develop Java programs using basic programming constructs.
CO2: Apply object-oriented concepts to design Java applications.
CO3: Implement inheritance and polymorphism in Java programs.
CO4: Use packages and file handling techniques in Java applications.
CO5: Develop Java programs using exception handling and multithreading concepts.

Mapping of Course Outcomes with Program Outcomes:

CO/PO	PO 1	PO 2	PO 3	PO 4	PO 5	PO 6	PO 7	PO 8	PO 9	PO 10	PO 11
CO1	2	1	1	-	1	-	-	-	-	-	-
CO2	2	2	1	-	1	-	-	-	-	-	-
CO3	2	2	1	-	1	-	-	-	-	-	-
CO4	1	2	1	1	2	-	-	-	-	-	-
CO5	2	2	1	1	2	-	-	-	-	-	-

Mapping of Course Outcomes with Program Specific Outcomes:

CO/PSO	PSO1	PSO2
CO1	1	-
CO2	1	-
CO3	1	-
CO4	2	-
CO5	2	-

UNIT-1

Java Fundamentals and Problem Solving: Introduction to Java, Features of Java, Java Program Structure, Data Types, Variables, Operators, Control Statements, Arrays.

1. Write a Java program to check whether a given number is an Armstrong Number.
2. Write a Java program to generate the Fibonacci series up to N terms.
3. Write a Java program to sort the elements of an array in ascending order.
4. Write a Java program to find the second largest element in an array.
5. Write a Java program to remove duplicate elements from an array.

UNIT-2

Classes, Objects and Strings: Classes and Objects, Methods, Constructors, Constructor Overloading, Method Overloading, this, static, final, String class and its methods

1. Write a Java program to create a Student class and display student details using constructors.
2. Write a Java program to demonstrate constructor overloading.

3. Write a Java program to implement method overloading for adding values of different data types and varying numbers of arguments.
4. Write a Java program to check whether a given string is an anagram.
5. Write a Java program to check whether a given string is a pangram using String methods.

UNIT-3

Inheritance and Polymorphism: Inheritance, Types of Inheritance, super keyword, Method Overriding, Abstract Classes, Dynamic Method Dispatch, Interfaces.

1. Write a Java program to demonstrate single inheritance using Student and Result classes.
2. Write a Java program to demonstrate multilevel inheritance.
3. Write a Java program to calculate the area of different shapes using abstract classes.
4. Write a Java program to demonstrate runtime polymorphism using method overriding.
5. Write a Java program to demonstrate multiple inheritance using interfaces.

UNIT-4

Packages, File Handling : Packages, Access Specifiers, Wrapper Classes, File Handling (FileReader, FileWriter, BufferedReader, BufferedWriter)

1. Write a Java program to create and use a user-defined package.
2. Write a Java program to demonstrate the use of Wrapper Classes by converting primitive data types into wrapper objects and vice versa.
3. Write a Java program to read data from one file and write it into another file.
4. Write a Java program to count the number of characters, words, and lines in a text file
5. Write a Java program to store even numbers in Even.txt and odd numbers in Odd.txt.
.

UNIT-5

Exception Handling and Multithreading: Exception Handling (try, catch, throw, throws, finally), User-defined Exceptions, Thread Life Cycle, Thread Creation, Synchronization, Inter-thread Communication.

1. Write a Java program to demonstrate multiple catch blocks in exception handling.
2. Write a Java program to create and use a user-defined exception.
3. Write a Java program to create threads by extending the Thread class.
4. Write a Java program to create threads by implementing the Runnable interface.
5. Write a Java program to solve the Producer–Consumer problem using synchronization.

Additional Practice:

1. Write a Java program to create a Calculator using methods to perform addition, subtraction, multiplication, and division.

2. Write a Java program to implement a simple Banking System using classes to perform deposit, withdrawal, and balance enquiry operations.

3. Write a Java program to maintain a Student Record System that allows adding student details and displaying the topper based on marks.

4. Write a Java program to implement a Phone Book Application that allows users to add, search, update, and delete contact details.

Reference Books:

1. The Complete Reference Java, Herbert Schildt, TMH ,8th Edition,ISBN 978-1260440232.
2. Java one step ahead, Anita seth, B.L.Juneja, Oxford, First Edition.ISBN: 9780199459643.
3. Introduction to java programming, by Y Daniel Liang, Seventh Edition, Pearson. ISBN: 978-8131729588
4. Core Java: An Integrated Approach, R.Nageswara Rao, Dream tech press.ISBN:978-9351199250

Web Links:

1 https://academy.oracle.com/pages/coursedescription/Oracle%20Academy%20Java%20Programming%20Course%20Description.pdf
2 https://nptel.ac.in/courses/106/105/106105191/
3 http://java.sun.com/docs/books/tutorial/

ECAD Tools

	L	T	P	C
Course Code:2501EC16	**0**	**0**	**2**	**2**

Course Outcomes:

At the end of the course, student will be able to:

CO1: Comprehend the insight of CAD Tools in modern design.
CO2: Develop combinational logic circuits by using CAD tools.
CO3: Build sequential logic circuits using Verilog HDL operators.
CO4: Analyze the performance of logic schematics using CAD simulation tools.
CO5: Infer the performance of logic circuits using DRC, LVS and PEX.

Mapping of Course Outcomes with Program Outcomes:

CO/PO	PO 1	PO 2	PO 3	PO 4	PO 5	PO 6	PO 7	PO 8	PO 9	PO 10	PO 11
CO1	3	1	-		2	-	-	1	1	-	1
CO2	3	2	-	-	2	-	-	1	1	-	1
CO3	2	2	-	-	2	-	-	1	1	-	1
CO4	3	2	-	-	2	-	-	1	1	-	1
CO5	3	2	-	-	2	-	-	1	1	-	1

Mapping of Course Outcomes with Program Specific Outcomes:

CO/PSO	PSO1	PSO2
CO1	-	2
CO2	-	2
CO3	-	2
CO4	-	2
CO5	-	2

Practice:

1. Understanding the working platform with Xilinx Vivado and its device, family and package Selection.
2. Design and Implementation of Combinational Circuits Priority Encoder and Comparator using data flow & structural style.
3. Design and Implementation of Sequential Circuits to detect a given sequence using with and without overlapping (Mealy & Moore machines).
4. Design and Implementation of a traffic light controller in a three road & four road junctions.
5. Exercise on Concatenation, Replication operators, Reduction and Conditional operators in Verilog HDL.
6. Plotting the (i) output characteristics (ii) Transfer characteristics of an n-channel and p-channel MOSFET with Cadence.
7. Working with Schematic for Ring Oscillator with variable amounts of Pull up to pull down ratios.

8. Design a full adder by instantiating the logic gates. Make a comment on design style on its performance.
9. Design a NAND gate by using NMOS, PMOS and CMOS technologies and make a comment on its performance.
10. Design a layout for given logic and test for its DRC, LVS and PEX. Make a note on change in propagation delay with respect to PEX data.

Additional Practice:

3. Design and plot the characteristics of a 4x1 digital multiplexer using pass transistor logic and TG logic.
4. Design and plot the characteristics of a positive and negative latch based on multiplexers

Text Books:

1. CMOS Digital Integrated Circuits : Analysis and Design, S. M. Kang and Y. Leblebici, McGraw-Hill Education, 3rd Edition, ISBN: 978-0071243421.
2. Silicon VLSI Technology: Fundamentals, Practice & Modeling, James D. Plummer, Micheal Deal , Peter B. Griffin, Pearson India, 1st Edition, ISBN: 978-0130850379.

Reference Books:

1. Microchip Fabrication: A Practical Guide to Semiconductor Processing, Peter Van Zant, McGraw-Hill Professional, 6th Edition, ISBN: 978-0071821018.
2. CMOS Circuit Design, Layout and Simulation, R. Jacob Baker, Wiley-IEEE Press, 4th Edition, ISBN: 978-0780334168.
3. J. M. Rabaey, A. P. Chandrakasan and B. Nikolic, Digital Integrated Circuits: A Design Perspective, Pearson Education India, 2nd Edition,ISBN: 978-9332573925.

Web Links:

1. https://www.cadence.com/en_US/home/company/cadence-academic-network/educators/vlsi-fundamentals.html, Cadence Design Systems.
2. https://www.xilinx.com/video/hardware/getting-started-vivado-high-level-synthesis.html , Xilinx Vivado High Level Synthesis.
3. https://onlinecourses.nptel.ac.in/noc23_ee137/preview.

Verification Using Verilog & UVM

	L	T	P	C
Course Code:2501EC017	**0**	**0**	**2**	**2**

Course Outcomes:

At the end of the course, student will be able to:

CO1: Develop Basic Testbench using UVM.
CO2: Apply assertion based and Coverage – Driven verification techniques to the testbench.
CO3: Implement Functional Coverage models and verify complex protocols like AXI, PLle etc.,
CO4: Implement TLM interfaces for communication and advanced constrained Networks.
CO5: Verify designs using multiple interfaces and mixed signals.

Mapping of Course Outcomes with Program Outcomes:

CO/PO	PO 1	PO 2	PO 3	PO 4	PO 5	PO 6	PO 7	PO 8	PO 9	PO 10	PO 11
CO1	3	1	-	-	2	-	-	1	1	-	1
CO2	3	2	-	-	2	-	-	1	1	-	1
CO3	2	2	-	-	2	-	-	1	1	-	1
CO4	3	2	-	-	2	-	-	1	1	-	1
CO5	3	2	-	-	2	-	-	1	1	-	1

Mapping of Course Outcomes with Program Specific Outcomes:

CO/PSO	PSO1	PSO2
CO1	-	2
CO2	-	2
CO3	-	2
CO4	-	2
CO5	-	2

Practice:

1. Basic Testbench:
   a. Develop a simple Verilog testbench to simulate a digital design.
   b. Create stimuli and check responses manually.
2. Basic UVM Testbench
   a. Develop a simple UVM testbench framework.
   b. Implement basic UVM components: env, agent, driver, sequencer, and monitor.
3. Stimulus Generation:
   a. Use UVM sequences to generate stimuli.
   b. Create constrained random test cases.

4. Score boarding:
    a. Implement a scoreboard in UVM to compare expected vs. actual results.
    b. Use functional coverage to track verification progress.
5. Assertion-Based Verification:
    a. Write System Verilog assertions to check protocol compliance.
    b. Integrate assertions into a UVM testbench.
6. Coverage-Driven Verification:
    a. Develop coverage models using cover groups and cover points.
    b. Analyse coverage results to identify untested scenarios.
7. VIP Integration:
    a. Integrate UVM Verification IP (VIP) into the testbench.
    b. Verify complex protocols like AXI, PCIe, etc.
8. Functional Coverage:
    a. Define and implement functional coverage models.
    b. Analyse coverage data to ensure all design functionalities are tested.
9. Reusable UVM Components:
    a. Create reusable UVM components for different testbenches.
    b. Parameterize components for flexibility.
10. Transaction-Level Modelling (TLM):
    a. Implement TLM interfaces for communication between UVM components.
    b. Use TLM for high-level transaction Modelling.
11. Advanced Stimulus Generation:
    a. Implement advanced constrained random techniques.
    b. Use UVM sequences to control stimulus generation dynamically.
12. Debugging and Logging:
    a. Utilize UVM reporting mechanisms for debugging.
    b. Implement custom error and status messages.

Additional Practice:

1. Multiple Interface Verification:
    a) Verify designs with multiple interfaces.
    b) Develop agents and drivers for each interface.
2. Mixed-Signal Verification:
    a) Integrate Analog models with digital testbenches.
    b) Use Real-number modelling (RNM) techniques.
3. Performance and Timing Verification:
    a) Measure and verify timing constraints.
    b) Use UVM to simulate and check timing behaviours
4. Interoperability Testing:
    a) Test interoperability between different modules or IP blocks.
    b) Use UVM to create complex test scenarios.

Text Books:

1. A Practical Guide to Adopting the Universal Verification Methodology (UVM) Second Edition, ISBN: 978-1300535935.
2. The UVM Primer:A Step-by-Step Introduction to the Universal Verification Methodology by Ray Salemi, ISBN: 978-0974164939.

Reference Books:

1. A Practical Guide for System Verilog Assertions by Srikanth Vijayaraghavan & Meyyappan Ramanathan, ISBN:978-1489992796.
2. Getting Started with UVM: A Beginner's Guide by Vanessa R. Coppe, ISBN:978-0615819976.

Web Links:

1. https://www.cadence.com/en_US/home/training/all-courses/86070.html
2. https://www.chipverify.com/tutorials/uvm
3. https://verificationacademy.com/forums/t/systemverilog-or-uvm/39566

Value Added Courses (VAC)

Course Code	Course Name	Level	L	T	P	C	CIE	SEE	Total	Pre-requisite
2501CS04	Internet of Things	FC			1	1	50	50	100	-
2501CS02	Data Analysis Using Python	IC			2	2	50	50	100	PPSC
2501UC11	Employability Skills-I	FC			3	0	100	-	100	-
2501UC13	Employability Skills-II	FC			3	0	100	-	100	ES-I
2501UC14	Employability Skills-III	IC			3	0	100	-	100	ES-II
2501UC15	Employability Skills-IV	IC			3	0	100	-	100	ES-III
2501UC16	Employability Skills-V	AC			3	1	100	-	100	ES-IV
2501CS10 / 2501CS92	Advanced Data Structures & Algorithm Analysis / Data Structures using C$	AC	2		1	3	100	-	100	DS
Total			**2**		**19**	**7**				

Value Added Courses (VAC)

Internet of Things

	L	T	P	C
Course Code: 2501CS04	**0**	**0**	**1**	**1**

Course Outcomes:

At the end of the course, student will be able to:

CO1: Analyze IoT architecture and apply embedded system fundamentals to implement digital and analog interfacing using Arduino UNO.

CO2: Interface and acquire data from various analog and digital sensors and process real-time data using appropriate techniques.

CO3: Design and implement sensor-based automation systems by integrating sensors and actuators with decision-making logic for real-time applications.

CO4: Implement communication protocols and develop multi-sensor systems using serial and I2C communication, and integrate IoT devices such as NodeMCU ESP8266 / ESP32 for data transmission.

CO5: Design, develop, and demonstrate complete IoT-based solutions for real-time applications involving cloud connectivity, remote monitoring, and control as part of cornerstone projects.

Mapping of Course Outcomes with Program Outcomes:

CO/PO	PO 1	PO 2	PO 3	PO 4	PO 5	PO 6	PO 7	PO 8	PO 9	PO 10	PO 11
CO1	3	1			2						
CO2	3	2	1	1	2						
CO3	3	2	2		3				1	1	
CO4	3	2	2	1	3				1	1	
CO5	2	2	3	1	3				2	2	1

Mapping of Course Outcomes with Program Specific Outcomes:

CO/PSO	PSO1	PSO2
CO1	3	1
CO2	3	2
CO3	3	2
CO4	2	3
CO5	2	3

List of Experiments:

1. Analyze the architecture, features, GPIO interfaces, and communication protocols (UART, I2C, SPI, and Wi-Fi) of IoT hardware platforms such as ESP32, NodeMCU ESP8266, and Arduino UNO for real-time embedded IoT applications.

2. Study the working principles and interfacing of IoT sensors such as LDR, DHT11, MQ2/MQ135 gas sensor, soil moisture sensor, ultrasonic sensor, rain sensor, RFID, sound sensor LM393, touch sensor, PIR sensor, and IR sensor, along with actuators such as LED, buzzer, relay, and servo motor.

3. Design and implement digital output control using Arduino UNO to generate LED blinking patterns with fixed and variable delays for understanding timing control.

4. Interface an analog sensor (LDR) with Arduino using a voltage divider, acquire real-time data through ADC, display values on Serial Monitor, and implement threshold-based logic to control an LED or buzzer based on light intensity.

5. Develop a temperature-based automation system by interfacing LM35 sensor with Arduino and controlling an external device through a relay module based on predefined temperature thresholds.

6. Interface an ultrasonic sensor with Arduino UNO to measure distance by generating trigger pulses and calculating echo response time, and implement distance-based control of an actuator (LED/buzzer).

7. Design and implement a multi-sensor data acquisition system by interfacing multiple sensors with Arduino/ESP module, process and display combined sensor data.

8. Interface an I2C-based sensor such as BMP180 with Arduino UNO or NodeMCU ESP8266 to acquire environmental data and analyze I2C communication.

9. Establish Wi-Fi connectivity using NodeMCU ESP8266 to acquire sensor data and transmit it to an IoT cloud platform for remote monitoring.

10. Design and implement a complete IoT system using ESP8266 for real-time sensor data acquisition, cloud-based visualization, and remote control of an actuator (LED/relay) through a web or mobile dashboard.

Cornerstone Projects:

1 **Smart Room Automation System**

Description

Develop an IoT-based room automation system that automatically controls lighting based on occupancy and ambient light conditions.

Expected Outcome

Automatic energy-saving room lighting system.

Optional Advanced Feature Integration (Implement Any One)

- Mobile app control
- Voice assistant integration

- Energy analytics dashboard
- Automatic scheduling

2 IoT Weather Monitoring System

Description

Design a weather monitoring system that measures temperature and humidity and uploads data to the cloud.

Expected Outcome

Real-time environmental monitoring system.

Optional Advanced Feature Integration (Implement Any One)

- Weather trend analysis
- Mobile dashboard
- Data logging
- Alert notifications

3 Smart Plant Monitoring System

Description

Develop a soil moisture monitoring system that alerts users when plants require watering.

Expected Outcome

Automated plant monitoring and water-saving system.

Optional Advanced Feature Integration (Implement Any One)

- Cloud monitoring
- Water usage analytics
- Mobile notifications
- Predictive irrigation alerts

4 IoT Gas Leakage Alert System

Description

Create a gas leakage detection system that generates alerts during hazardous gas conditions.

Expected Outcome

Real-time gas leakage detection and alert system.

Optional Advanced Feature Integration (Implement Any One)

- Cloud alert notifications
- Emergency alarm system
- Gas level analytics
- SMS/email alerts

5 Smart Dustbin Monitoring System

Description

Design a smart waste monitoring system capable of detecting garbage levels in a dustbin.

Expected Outcome

Smart waste-level monitoring system.

Optional Advanced Feature Integration (Implement Any One)

- Overflow notifications
- Cloud dashboard
- Waste collection analytics
- Mobile monitoring

6 Smart Parking Slot Detection System

Description

Develop a parking occupancy monitoring system using IR sensors.

Expected Outcome

Automatic parking slot availability indication system.

Optional Advanced Feature Integration (Implement Any One)

- Parking analytics
- Web dashboard
- Vehicle count monitoring
- Mobile slot status display

7 IoT-Based Fire Detection System

Description

Develop a fire detection system capable of identifying flame conditions and generating alerts.

Expected Outcome

Real-time fire detection and warning system.

Optional Advanced Feature Integration (Implement Any One)

- Cloud notifications
- Incident logging
- Emergency alert system
- Mobile monitoring

8 IoT-Based Noise Pollution Monitoring System

Description

Design a noise monitoring system to measure and visualize environmental sound levels.

Expected Outcome

Noise pollution monitoring and analysis system.

Optional Advanced Feature Integration (Implement Any One)

- Sound level analytics
- Noise trend visualization
- Alert notifications
- Cloud data logging

9 IoT-Based Digital Notice Board System

Description

Develop a wireless digital notice board capable of displaying real-time notices through the internet.

Expected Outcome

Wireless real-time digital announcement system.

Optional Advanced Feature Integration (Implement Any One)

- Multi-user access
- Emergency alert mode
- Scrolling text display
- Mobile/web portal integration

10 Smart Medicine Reminder System

Description

Develop a medicine reminder system that alerts users according to predefined schedules.

Expected Outcome

Automated medicine reminder and monitoring system.

Optional Advanced Feature Integration (Implement Any One)

- Voice reminder support
- Mobile notifications
- Medicine intake logging
- Caretaker alert system

11 Smart Water Level Monitoring System

Description

Design a water level monitoring system that continuously measures tank water levels and generates alerts.

Expected Outcome

Real-time water level monitoring and alert system.

Optional Advanced Feature Integration (Implement Any One)

- Mobile alerts
- Water usage analytics
- Overflow prediction
- Cloud dashboard visualization

12 Smart Intruder Alert System

Description

Develop an IoT-enabled security system capable of detecting unauthorized movement and generating alerts.

Expected Outcome

Real-time intrusion detection and alert system.

Optional Advanced Feature Integration (Implement Any One)

- Mobile notifications
- Cloud event logging
- Security analytics
- Alarm activation system

Note:

- The cornerstone project team size shall be four (4) students.
- Students may select any one of the above prescribed projects or a project of their own choice with the prior permission of the Course instructor.
- The evaluation of the Cornerstone Project shall be based on the project implementation, oral presentation, 10-minute video presentation, report and viva voce.
- The video presentation should consist of the working procedure of the project along with contribution of each student for a minimum of 2 minutes.
- Finally, the Source code of the cornerstone Project has to be pushed into the Students GitHub repository (if applicable).

Reference Books:

1. Internet of Things: A Hands-On Approach, Arshdeep Bahga, Vijay Madisetti, First Edition, Universities Press, ISBN: 978-8173719547.
2. Getting Started with Arduino, Massimo Banzi, Michael Shiloh, Third Edition, Maker Media (O'Reilly), ISBN: 978-9352130047.
3. Programming the Internet of Things: An Introduction to Building Integrated, Device-to-Cloud IoT Solutions, Andy King, First Edition, O'Reilly Media, ISBN: 978-1492081418.
4. Designing the Internet of Things, Adrian McEwen, Hakim Cassimally, First Edition, Wiley, ISBN: 978-1118430620.

Web Links:

1. https://nptel.ac.in/courses/106105166
2. https://docs.arduino.cc/
3. https://arduino-esp8266.readthedocs.io/
4. https://docs.arduino.cc/arduino-cloud/
5. https://randomnerdtutorials.com/projects-esp32/

Data Analysis Using Python

(Common to CE, EEE, ME, ECE, CSE, IT, AIML, CSE(DS), PT & Min.E)

	L	T	P	C
Course Code: 2501CS02	**0**	**0**	**2**	**2**

Course Outcomes:

At the end of the course, student will be able to:

CO1: Make use of control statements and data structures to solve problems
CO2: Apply OOPs concepts and files to develop applications.
CO3: Explain the data collection, management and storage for processing using Numpy
CO4: Make use of Pandas to create and manipulate data structures like Series and DataFrames.
CO5: Create plots using Matplotlib library for better visualization.

Mapping of Course Outcomes with Program Outcomes:

CO/PO	PO 1	PO 2	PO 3	PO 4	PO 5	PO 6	PO 7	PO 8	PO 9	PO 10	PO 11
CO1	2	2	1	-	2	-	-	1	1	-	1
CO2	1	2	3	-	2	-	-	1	1	-	1
CO3	1	3	2	-	2	-	-	1	1	-	1
CO4	1	2	3	-	2	-	-	1	1	-	1
CO5	1	2	3	-	2	-	-	1	1	-	1

UNIT-I
Introduction:
History of Python, Applications of Python,Running Python Scripts, Variables, Assignment, Keywords, Input-Output, Indentation, Operators and Expressions, Control Flow- if, if-elif-else, for, while, break, continue, Data Structures Lists - Operations, Slicing, Methods; Tuples, Sets, Dictionaries, Sequences. Comprehensions, Defining Functions, Calling Functions, Passing Arguments.

1.1) Write a program that asks the user for a weight in kilograms and converts it to pounds. There are 2.2 pounds in a kilogram.
1.2) Write a program that uses a for loop to print the numbers 8, 11, 14, 17, 20, . . . , 83, 86, 89.
1.3) Split a string into array of characters in Python.
1.4) write a Python program to get the largest number from a list.
1.5) Write a Python program to calculate the nth Fibonacci number using a function.

UNIT -II
Object Oriented Programming:
Concept of class, object and instances, Constructor, class attributes and destructors, Real time use of class in live projects, Inheritance , overlapping and overloading operators, Adding and retrieving dynamic attributes of classes, Programming using Oops support Design with Classes: Objects and Classes, Data modeling Examples,Errors and Exceptions:

Syntax Errors, Exceptions, Handling Exceptions, Raising Exceptions, Userdefined Exceptions.

2.1) Write a Python program that defines a Car class with attributes like make, model, and year, and methods like start() to start the car and stop() to stop it.
2.2) Write a Python program that demonstrates inheritance by creating a base class Animal and derived classes like Dog, Cat, etc., each with their specific behaviors.
2.3) Define a base class called Animal with a method make_sound(). Implement derived classes like Dog, Cat, and Bird that override the make_sound() method to produce different sounds. Demonstrate polymorphism by calling the method on objects of different classes.
2.4) Write a Python program that demonstrates error handling using the try-except block to handle division by zero.

UNIT -III
Numpy:
Introduction to numpy, creating arrays, using arrays and scalars, Indexing Arrays, Array transposition, Universal array function, Array Processing, Array Input and Output, Examples.

3.1) Write a NumPy program using methods – info, add, array, all, greater, greater_equal, less and less_equal,equal, allclose, zeros, ones, linspace, tolist.
a. To get help on the add function
b. To test whether none of the elements of a given array is zero.
c. To create an element-wise comparison (greater, greater_equal, less and less_equal, equal, equal within a tolerance) of two given arrays.
3.2) Write a NumPy program using NumPy methods - max, min, argmax, argmin, argmax, repr, count, bincount, unique.
a. To extract all numbers from a given array which are less and greater than a specified number.
b. To find the indices of the maximum and minimum numbers along the given axis of an array.

UNIT -IV
Pandas:
Exploring Data using Series, Exploring Data using DataFrames, Index objects, Re index, Drop Entry, Selecting Entries, Data Alignment, Rank and Sort, Summary Statistics, Data Munging in Python using Pandas, Index Hierarchy, Example Problem.

4.1) Pandas DataSeries:
i)Write a Pandas program to create and display a one-dimensional array-like object containing an array of data using Pandas module.
ii)Write a Pandas program to convert a Panda module Series to Python list and it's type.
4.2) Pandas DataFrames:
Consider Sample Python dictionary data and list labels:
exam_data = {'name': ['Anastasia', 'Dima', 'Katherine', 'James', 'Emily','Michael', 'Matthew', 'Laura', 'Kevin', 'Jonas'],
'score': [12.5, 9, 16.5, np.nan, 9, 20, 14.5, np.nan, 8, 19],
'attempts': [1, 3, 2, 3, 2, 3, 1, 1, 2, 1],
'qualify': ['yes', 'no', 'yes', 'no', 'no', 'yes', 'yes', 'no', 'no', 'yes']}

labels = ['a', 'b', 'c', 'd', 'e', 'f', 'g', 'h', 'i', 'j']
i)Write a Pandas program to create and display a Data Frame from a specified dictionary data which has the index labels.
ii)Write a Pandas program to change the name 'James' to 'Suresh' in name column of the Data Frame.
iii)Write a Pandas program to insert a new column in existing Data Frame
iv)Write a Pandas program to get list from Data Frame column headers.
v)Write a Pandas program to get list from Data Frame column headers.

UNIT-V

Introduction to Matplotlib:

Introduction to Matplotlib Library, Plotting Data: Line Plots, Scatter Plots, Customizing Plots, Common Types of Plots Bar Charts: Simple Bar Plot, Horizontal Bar Plot, Advanced Plot Customizations.

5.1) Create a series of plots to analyze a given dataset.
5.2) Generate a subplot layout with various plot types (scatter, line, bar).
5.3) Visualize time-series data and customize axis labels and date formats.
5.4) Create a 3D plot.

Additional Practice:

1. Write a program to find the greatest number that can be formed by using given set of numbers.
2. Write a Python program to develop a GUI based Calculator application.
3. Write a Python program to develop a GUI based todo list application for adding, deleting and updating tasks.

Reference Books:

1. Python for Everybody Exploring Data in Python 3, Charles Russell Severance, SueBlumenberg. ISBN:978-1530051120.
2. Code with Python: Suresh Sundaradasu,S.Rama Sree ISBN: 978-9355017574
3. Python Programming, Dr.Maganti Venkatesh,Monelli Ayyavaraiah,Niveditha Ravindra Pandey, NeethumolSabu,Charulatha Publications ISBN:978-93-5577-695-6.
4. Python for Data Analysis: Data Wrangling with Pandas, NumPy, and IPython, Wes McKinney, O'Reilly Media, **ISBN:** 978-1491957660.

Web Links:

1. https://www.hackerrank.com/
2. https://www.codechef.com/
3. https://www.topcoder.com/
4. https://code-cracker.github.io/

Employability Skills- I

(Common to CE, EEE, ME, ECE, CSE, IT, AIML, CSE(DS), PT, Min.E & Agri.E)

	L	T	P	C
Course Code:2501UC11	**0**	**0**	**3**	**0**

Course Outcome:
At the end of the course, student will be able to :

CO1: Apply fundamental arithmetic concepts such as number systems, LCM & HCF, ratio & proportion, and averages to solve quantitative problems efficiently.

CO2: Analyze number and letter series to identify logical patterns and predict subsequent elements.

CO3: Select the option by evaluating relationships in analogy-based problems and detecting inconsistencies in logical sequences

CO4: Demonstrate effective verbal communication skills by using appropriate parts of speech and tone in various interpersonal and professional contexts.

Mapping with Program Outcomes:

CO/PO	PO1	PO2	PO3	PO4	PO5	PO6	PO7	PO8	PO9	PO10	PO11
CO1	2	3	-		1	-		-	-	-	-
CO2	1	3	-	2	2	-	-	-	-	-	-
CO3	-	3	-	2	1	-	-	-	-	-	-
CO4	-	-	-	-	-	-	-	2	3	-	1

Aptitude:

Number System, LCM & HCF, Ratio and Proportion, Averages

Reasoning:

Number Series, Letter Series, Number Analogy, Letter Analogy, Odd Man Out, Logical Sequence of Words.

Verbal:

Introduction to soft skills, how to improve communication? Parts of Speech, Mind your language towards better English, Vocabulary Expansion

Text Books:

1. Quantitative Aptitude –Dr. R. S. Aggarwal, S CHAND, ISBN · 9789355012326.
2. A Modern Approach to Verbal and Non-Verbal Reasoning – Dr. R. S. Aggarwal, ISBN-13. 978-9352832163.
3. Quick Learning Objective General English – Dr. R. S. Aggarwal, S CHAND, ISBN-13. 978-8121922111.

Reference Books:

1. Quantitative Aptitude – Abhijit Guha Mc Graw Hill Publications, ISBN-13 9789389957426.
2. How To Crack Test of Reasoning Verbal , Non-Verbal & Analytical – Jaikishan and Premkishan, Arihant Publications, NEW EDITION 2024, ASIN : B0CRQ9BVBC.
3. A New Approach to Objective English – R. S. Dhillon DGP Publications, ISBN-13: 978-8186651032.

Web Links:

1. www.indiabix.com
2. www.bankersadda.com

Employability Skills- II

(Common to CE, EEE, ME, ECE, CSE, IT, AIML, CSE(DS), PT, Min.E & Agri.E.)

	L	T	P	C
Course Code:2501UC13	**0**	**0**	**3**	**0**

Course Outcome:

At the end of the course, student will be able to :

CO1: Apply percentage, profit & loss, and partnership concepts to solve real-world quantitative problems.

CO2: Analyze age-related problems to develop logical problem-solving strategies.

CO3: Evaluate logical reasoning questions including ranking, directions, and alphabet tests for accurate decision-making.

CO4: Solve pattern-based problems in coding and decoding to enhance analytical skills.

CO5: Demonstrate effective written communication using correct grammar and structured presentation techniques

Mapping Course outcomes with Program Outcomes:

CO/PO	PO1	PO2	PO3	PO4	PO5	PO6	PO7	PO8	PO9	PO10	PO11
CO1	3	3	-	-	2	-	-	-	-	-	-
CO2	2	3	2	-	1	-	-	-	-	-	-
CO3	-	3	-	2	2	-	-	-	-	-	-
CO4	-	3	-	2	2	-	-	-	-	-	-
CO5	-	-	-	-		-	-	2	2	-	2

Aptitude:

Problems on Ages, Partnership, Percentages, Profit and Loss

Reasoning:

Coding and Decoding, Ranking Test, Alphabet Test, Direction Test

Verbal:

Written communication skill practice, Grammatical use, Concept of 4 step method for presentation, Present Tense

Text Books:

1. Quantitative Aptitude –Dr. R. S. Aggarwal, S CHAND, ISBN · 9789355012326.
2. A Modern Approach to Verbal and Non-Verbal Reasoning – Dr. R. S. Aggarwal, ISBN-13. 978-9352832163.
3. Quick Learning Objective General English – Dr. R. S. Aggarwal, S CHAND, ISBN-13. 978-8121922111.

Reference Books:

1. Quantitative Aptitude – Abhijit Guha Mc Graw Hill Publications, ISBN-13 9789389957426.
2. How To Crack Test of Reasoning Verbal , Non-Verbal & Analytical – Jaikishan and Premkishan, Arihant Publications, NEW EDITION 2024, ASIN : B0CRQ9BVBC.
3. A New Approach to Objective English – R. S. Dhillon DGP Publications, ISBN-13: 978-8186651032.

Web Links:

1. www.indiabix.com
2. www.bankersadda.com

Employability Skills- III

(Common to CE, EEE, ME, ECE, CSE, IT, AIML, CSE(DS), PT, Min.E & Agri.E.)

	L	T	P	C
Course Code:2501UC14	**0**	**0**	**3**	**0**

Course Outcome:

At the end of the course, student will be able to :

CO1: Solve financial and quantitative aptitude problems using concepts of simple and compound interest.

CO2: Apply logical time-work frameworks to solve real-time problems related to work efficiency and pipe systems.

CO3: Analyze and interpret problems related to blood relations, clocks, calendars, and coded inequalities.

CO4: Evaluate spatial and logical reasoning through cubes, dice, and symbolic interpretation problems.

CO5: Demonstrate effective communication using correct grammar, and participate actively in discussions and comprehension activities.

Mapping with Program Outcomes :

CO/PO	PO1	PO2	PO3	PO4	PO5	PO6	PO7	PO8	PO9	PO10	PO11
CO1	2	3	-	-	1	-	-	-	-	-	-
CO2	3	3	-	-	1	-	-	-	-	-	-
CO3	-	3	-	2	1	-	-	-	-	-	-
CO4	-	3	-	2	2	-	-	-	-	-	-
CO5	-	-	-	-	-	-	-	2	3	-	2

Aptitude:

Simple Interest, Compound Interest, Time and Work, Pipes and Cisterns

Reasoning:

Blood Relations, Calendar, Clocks, Cubes and Dice, Coded Inequalities

Verbal:

Grammar in use, Group discussion, Reading Comprehension, Past Tense, Future Tense

Text Books:

1. Quantitative Aptitude –Dr. R. S. Aggarwal, S CHAND, ISBN · 9789355012326.
2. A Modern Approach to Verbal and Non-Verbal Reasoning – Dr. R. S. Aggarwal, ISBN-13. 978-9352832163.
3. Quick Learning Objective General English – Dr. R. S. Aggarwal, S CHAND, ISBN-13. 978-8121922111.

Reference Books:

1. Quantitative Aptitude – Abhijit Guha Mc Graw Hill Publications, ISBN-13 9789389957426.
2. How To Crack Test of Reasoning Verbal , Non-Verbal & Analytical – Jaikishan and Premkishan, Arihant Publications, NEW EDITION 2024, ASIN : B0CRQ9BVBC.
3. A New Approach to Objective English – R. S. Dhillon DGP Publications, ISBN-13: 978-8186651032.

Web Links:

1. www.indiabix.com
2. www.bankersadda.com

Employability Skills- IV

(Common to CE, EEE, ME, ECE, CSE, IT, AIML, CSE(DS), PT, Min.E & Agri.E.)

	L	T	P	C
Course Code:2501UC15	**0**	**0**	**3**	**0**

Course Outcome:

At the end of the course, student will be able to:

CO1 Apply concepts of time, speed, distance, trains, boats and streams to solve motion-related aptitude problems.

CO2 Solve mensuration problems involving surface area and volume in real-world contexts.

CO3 Analyze logical reasoning questions involving Venn diagrams and syllogisms to make valid conclusions.

CO4 Interpret seating arrangements and solve non-verbal reasoning questions involving patterns and spatial reasoning.

CO5 Demonstrate effective communication through structured self-introduction, emails, letters, reports, and grammar usage.

Mapping with Program Outcome:

CO/PO	PO1	PO2	PO3	PO4	PO5	PO6	PO7	PO8	PO9	PO10	PO11
CO1	3	3	-		2	-	-	-	-	-	-
CO2	3	3	-		2	-	-	-	-	-	-
CO3	-	3	-	2	2	-	-	-	-	-	-
CO4	-	3	-	2	2	-	-	-	-	-	-
CO5	-	-	-	-	-	-	-	2	2	-	2

Aptitude:

Time, Speed and Distance, Problems on Trains, Boats and Streams, Mensuration - I, Mensuration - II

Reasoning:

Venn Diagrams, Syllogisms, Non - Verbal Reasoning, Seating Arrangement

Verbal:

Grammatical use, Self-introduction, Letters, E-Mail & Report writing, Error correction, Effective Communication

Text Books:

1. Quantitative Aptitude –Dr. R. S. Aggarwal, S CHAND, ISBN · 9789355012326.
2. A Modern Approach to Verbal and Non-Verbal Reasoning – Dr. R. S. Aggarwal, ISBN-13. 978-9352832163.
3. Quick Learning Objective General English – Dr. R. S. Aggarwal, S CHAND, ISBN-13. 978-8121922111.

Reference Books:

1. Quantitative Aptitude – Abhijit Guha Mc Graw Hill Publications, ISBN-13 9789389957426.
2. How To Crack Test of Reasoning Verbal, Non-Verbal & Analytical – Jaikishan and Premkishan,Arihant Publications, NEW EDITION 2024, ASIN : B0CRQ9BVBC.
3. A New Approach to Objective English – R. S. Dhillon DGP Publications, ISBN-13: 978-8186651032.

Web Links:

1. www.indiabix.com
2. www.bankersadda.com

Employability Skills- V

(Common to CE, EEE, ME, ECE, CSE, IT, AIML, CSE(DS), PT & Min.E)

	L	T	P	C
Course Code:2501UC16	**0**	**0**	**3**	**1**

Course Outcome:

At the end of the course, student will be able to :

CO1: Apply principles of permutations, combinations, probability, and logarithms to solve quantitative aptitude problems.

CO2: Interpret and analyze data from charts, graphs, and statistical tables for decision-making and accuracy.

CO3: Evaluate logical reasoning statements involving arguments, assumptions, conclusions, and data sufficiency.

CO4: Solve puzzle and eligibility test problems using analytical and critical thinking skills.

CO5: Demonstrate effective interpersonal, communication, and time management skills for successful personal and professional interactions.

Mapping with Program Outcomes:

CO/PO	PO1	PO2	PO3	PO4	PO5	PO6	PO7	PO8	PO9	PO10	PO11
CO1	3	3	-	-	2	-	-	-	-	-	-
CO2	3	3	-	-	2	-	-	-	-	-	-
CO3	-	3	-	2	2	-	-	-	-	-	-
CO4	-	3	-	2	2	-	-	-	-	-	-
CO5	-	-	-	-	-	-	-	2	3		2

Aptitude:

Permutations and Combinations, Probability, Data Interpretation, Logarithms, Statistics

Reasoning:

Puzzle Tests, Eligibility Test, Data Sufficiency, Statements – Arguments, Statements – Assumptions, Statements - Course of Action, Statements - Conclusions

Verbal:

Interview skills, Grammar in use, Interpersonal Skills, Negotiation Skills, Social Skills, Problem-Solving Skills, Time Management Skills

Text Books:

1. Quantitative Aptitude –Dr. R. S. Aggarwal, S CHAND, ISBN · 9789355012326.
2. A Modern Approach to Verbal and Non-Verbal Reasoning – Dr. R. S. Aggarwal, ISBN-13. 978-9352832163.
3. Quick Learning Objective General English – Dr. R. S. Aggarwal, S CHAND, ISBN-13. 978-8121922111.

Reference Books:

1. Quantitative Aptitude – Abhijit Guha Mc Graw Hill Publications, ISBN-13 9789389957426.
2. How To Crack Test of Reasoning Verbal, Non-Verbal & Analytical – Jaikishan and Premkishan, Arihant Publications, NEW EDITION 2024, ASIN : B0CRQ9BVBC.
3. A New Approach to Objective English – R. S. Dhillon DGP Publications, ISBN-13: 978-8186651032.

Web Links:

1. www.indiabix.com
2. www.bankersadda.com

Advanced Data Structures & Algorithm Analysis
(Common to AIML, CSE, CSE-DS, IT & ECE)

	L	T	P	C
Course Code: 2501CS10	**2**	**0**	**1**	**3**

Course Outcomes:
At the end of the Course, Student will be able to:

CO1: Analyze the algorithms efficiency and hashing techniques for searching.
CO2: Illustrate the concepts of search trees and operations of Priority Queues.
CO3: Analyze the algorithms of Divide & Conquer and Greedy paradigms.
CO4: Analyze the algorithms of Dynamic Programming paradigm.
CO5: Design the algorithms of Backtracking and Brach & Bound paradigms.

Mapping of Course Outcomes with Program Outcomes:

CO/PO	PO1	PO2	PO3	PO4	PO5	PO6	PO7	PO8	PO9	PO10	PO11
CO1	3	2	1	1							
CO2	2	2	1								
CO3	1	2	1	2							
CO4	2	2	2	1							
CO5	2	1	1	2							

Mapping of Course Outcomes with Program Specific Outcomes:

CO/PSO	PSO1	PSO2
CO1	2	
CO2	2	
CO3	2	
CO4	2	
CO5	2	

Unit – I

Introduction to Algorithm Analysis, Space and Time Complexity analysis, Asymptotic Notations.

Hashing: Introduction to Static Hashing, Hash Tables, Hash Functions, Different Hash Functions, Collision Resolution Techniques, Dynamic Hashing.

Practice:

1. Write a program to implement collision resolution techniques of Hash data structure.

Unit – II

AVL Trees – Creation, Insertion, Deletion operations and Applications.
B-Trees – Creation, Insertion, Deletion operations and Applications
Priority Queues (Heaps): Introduction, Binary Heaps-Model and Simple Implementation, Basic Heap Operations, Other Heap Operations, Applications of Priority Queues

Practice:

1. Write a program to implement AVL tree operations
2. Write a program to implement Max heap and min heap operations

Unit – III

Divide and Conquer: The General Method, Binary Search, Merge Sort, Quick Sort.

Greedy Method: The General Method, Job Sequencing with deadlines, Knapsack Problem, Minimum cost spanning trees, Single Source Shortest Paths.

Practice:

1. Write a program to sort the given list of elements using Merge sort technique using divide and conquer approach.
2. Write a program to implement Single Source Shortest Paths using greedy approach.

Unit – IV

Dynamic Programming: The General Method, Single Source Shortest Paths– General Weights (Bellman Ford Algorithm), All-pairs shortest paths, Optimal Binary Search Trees, 0/1 Knapsack, Travelling Salesperson problem

Practice:

1. Write a program to implement 0/1 Knapsack problem using Dynamic Programming approach.
2. Write a program to implement all pairs shortest path problem using Dynamic Programming approach.

Unit – V

Backtracking: The General Method, N-Queens Problem, Sum of Subsets problem, Graph Coloring, Hamiltonian cycles.

Branch and Bound: The General Method, 0/1 Knapsack Problem, Travelling Salesperson problem.

Practice:

1. Write a program to implement N-Queens problem using backtracking algorithm.
2. Write a program to implement Travelling Salesperson problem using branch and bound approach.

Text Books:

1. Fundamentals of Data Structures in C++, Horowitz, Ellis; Sahni, Sartaj; Mehta, Dinesh, 2nd Edition Universities Press.
2. Computer Algorithms in C++, Ellis Horowitz, Sartaj Sahni, Sanguthevar Rajasekaran, 2nd Edition University Press.

Reference Books:

1. Data Structures and program design in C, Robert Kruse, 2nd Edition Pearson Education Asia.
2. An introduction to Data Structures with applications, Trembley& Sorenson, McGraw Hill
3. The Art of Computer Programming, Vol.1: Fundamental Algorithms, Donald E Knuth, Addison - Wesley.
4. Data Structures using C & C++: Langsam, Augenstein &Tanenbaum, Pearson

Web Links:

1. https://archive.nptel.ac.in/courses/106/102/106102064/
2. https://archive.nptel.ac.in/courses/106/106/106106131/
3. http://peterindia.net/Algorithms.html

Data Structures using C

	L	T	P	C
Course Code: 2501CS92	**2**	**0**	**1**	**3**

Course Outcomes:
At the end of the course, student will be able to:

CO1: Explain fundamental data structures and analyze their basic computational complexity.
CO2: Implement arrays and linked lists using C for data-management applications.
CO3: Explain different operations on Stack and Queue with applications.
CO4: Implement trees and BSTs for hierarchical based applications.
CO5: Apply graph data structures to represent and solve real-world engineering problems.

Mapping of Course Outcomes with Program Outcomes:

CO/PO	PO 1	PO 2	PO 3	PO 4	PO 5	PO 6	PO 7	PO 8	PO 9	PO 10	PO 11
CO1	2	1	2					1	1		1
CO2	2	1	2		1			1	1		1
CO3	2	2	2		1			1	1		1
CO4	2	1	2		1			1	1		1
CO5	2	1	2	1	1			1	1		2

Mapping of Course Outcomes with Program Specific Outcomes:

CO/PSO	PSO1	PSO2
CO1	-	-
CO2	-	-
CO3	-	-
CO4	-	-
CO5	-	-

UNIT – I
Introduction to data structures – Classification – Abstract Data Types – Review of pointers, structures and dynamic memory allocation in C – Basic time and space complexity – Arrays and array operations – Linear Search – Binary Search – Bubble Sort – Selection Sort – Insertion Sort.

Practice:
1. Implement Linear Search and Binary Search
2. Implement Bubble Sort, Selection Sort and Insertion Sort.

UNIT – II
Dynamic data structures – Comparison of arrays and linked lists - Singly Linked Lists – Creation and traversal – Searching – Insertion and deletion – Doubly Linked Lists – Circular Linked Lists – Applications.

Practice:

1. Implement Single Linked List: Perform different operations in single linked list.
2. Perform different operations in double linked list
3. Implement Circular Linked List

UNIT – III

Stacks: Introduction to stacks: properties and operations, implementing stacks using array and linked list, applications of stacks.

Queues: Introduction to queues: properties and operations, Types of Queues, implementing queues using array and linked list, applications of queues.

Practice:

1. Implement Stack and its operations using array and linked list
2. Implement Queue and its operations using array and linked list

UNIT – IV

Non-linear Data Structures:

Trees: Definition of tree, Tree Terminology, types of trees, Binary tree traversals, Binary Search Tree – Insertion, Deletion.

Practice:

1. Create Binary search tree (BST) and Implement its operations.
2. Implement Binary search Tree (BST) Traversals.

UNIT – V

Graphs: Definition and Terminology – Representation of Graphs-Adjacency Matrix and Linked list, Graph Traversals (BFT & DFT)

Practice:

1. Implement Graph Traversal using Breadth First Search (BFS)
2. Implement Graph Traversal using Depth First Search (DFS)

Text Books:

1. Data Structures using C, Reema Thareja, Oxford University Press, 3rd Edition. ISBN: 978-9354979453

2. Data Structures, KV Sambasivarao, S Rama Sree, S.Chand. ISBN: 978-9358704730

Reference Books:

1. The Algorithm Design Manual, Steven S. Skiena, Springer Publication, Second Edition. ISBN: 978-1849967204

2. Fundamentals of data structures in C, Ellis Horowitz, Sartaj Sahni, Susan Anderson-Freed, Silicon Press, ISBN: 978-0716782506

3. Data Structures and Algorithms by Maganti Venkatesh, Naresh. ISBN: 9780929306407

4. Data Structures Using C, Reema Thareja, Oxford University Press, 2nd Edition. ISBN: 978-0198099307

Web Links:

1. https://nptel.ac.in/courses/106102064
2. https://archive.nptel.ac.in/courses/106/105/106105225/
3. https://www.udemy.com/topic/data-structures/
4. https://www.coursera.org/specializations/data-structures-algorithms
5. https://ds1-iiith.vlabs.ac.in/List%20of%20experiments.html

Mandatory Courses (MC)

Course Code	Course Name	Level	L	T	P	C	CIE	SEE	Total	Pre-requisite
2501AC01	Environmental Science	FC	2			0	100	-	100	-
2501AC02	Constitution of India	FC	2			0	100	-	100	-
2501AC03	Research Methodology	FC	2			0	100	-	100	-
2501AC04	Intellectual Property Rights & Patents	FC	2			0	100	-	100	-
2501AC05	Indian Knowledge Systems	FC	2			0	100	-	100	-
	Total		**10**			**0**				

Mandatory Courses (MC)

Environmental Science

(Common to CE, EEE, ME, ECE, CSE, IT, AIML, CSE(DS), PT &Min.E)

	L	T	P	C
Course Code: 2501AC01	**2**	**0**	**0**	**0**

Course Outcomes: At the end of the Course, Student will be able to:

CO1: Outline the natural resources and their importance for the sustenance of the life
CO2: Explain about the biodiversity of India, threats and its conservation methods
CO3: Illustrate various attributes of the pollution, impacts and measures to control the pollution along with waste management practices
CO4: Describe social issues of both rural and urban environment to combat the challenges and the legislations of India in environmental protection
CO5: Explain the population growth and its implications

Mapping of Course Outcomes with Program Outcomes:

CO/PO	PO 1	PO 2	PO 3	PO 4	PO 5	PO 6	PO 7	PO 8	PO 9	PO 10	PO 11
CO1	1	-	-	-	1	-	2	-	-	-	-
CO2	1	-	-	-		-	3	-	-	-	-
CO3	-	-	-	-	2	-	3	-	-	-	1
CO4	-	-	-	-	1	-	3	1	-	-	1
CO5	-	-	-	-	-	-	3	-	-	-	-

UNIT – I

Multidisciplinary Nature of Environmental Studies:

Definition, Scope and Importance, Need for Public Awareness.

Natural Resources: Renewable and non-renewable resources – Natural resources and associated problems.

UNIT – II

Ecosystem, Biodiversity and Its Conservation:

Ecosystems: Concept of an ecosystem. – Structure and function of an ecosystem – Producers, consumers, and decomposers. Food chains, food webs and ecological pyramids.

Biodiversity And Its Conservation: Definition: genetic, species and ecosystem diversity – Biogeographical classification of India – Values of biodiversity. Hot-spots of biodiversity – Threats to biodiversity. Conservation of biodiversity: In-situ and Ex-situ conservation of biodiversity.

UNIT – III

Environmental Pollution and Solid Waste Management:

Environmental Pollution: Definition, Cause, effects, and control measures of:

a. Air Pollution.
b. Water Pollution
c. Soil Pollution
d. Marine Pollution
e. Noise Pollution

Solid Waste Management:
Causes, effects and control measures of urban and industrial wastes – Role of an individual in prevention of pollution

UNIT – IV
Social Issues and The Environment:
Social Issues and the Environment: From Unsustainable to Sustainable development – Urban problems related to Energy &Water. Resettlement and rehabilitation of people, Environmental ethics, Climate change, global warming, acid rain, ozone layer depletion, nuclear accidents, and holocaust. Environment Protection Act – Air (Prevention and Control of Pollution) Act. – Water (Prevention and control of Pollution) Act-Wildlife Protection Act – Forest Conservation Act – Issues involved in enforcement of environmental legislation – Public awareness.

UNIT – V
Human Population and The Environment:
Population growth, variation among nations.
Environment and human health, Human Rights, Value Education. Role of Information Technology in Environment and human health.

Text Books:
1. Textbook of Environmental Studies for Undergraduate Courses, Erach Bharucha for University Grants Commission, Universities Press. ISBN: 9788173718625.
2. Environmental Studies, Palaniswamy – Pearson education. ISBN: 978-9332528277.

Reference Books:
1. Textbook of Environmental Science, Deeksha Dave and E.Sai Baba Reddy, Cengage Publications. ISBN: 978-8131517604.
2. Textbook of Environmental Sciences and Technology by M.Anji Reddy, B.S Publication. ISBN: 9385433385.
3. Comprehensive Environmental studies by J.P.Sharma, Laxmi publications. ISBN: 978-8170087380.

Web Links:
1. https://archive.nptel.ac.in/courses/127/105/127105018/
2. https://onlinecourses.swayam2.ac.in/cec24_ge05/preview

Constitution of India

(Common to CE, EEE, ME, ECE, CSE, IT, AIML, CSE(DS), PT &Min.E)

	L	T	P	C
Course Code: 2501AC02	**2**	**0**	**0**	**0**

Course Outcomes: At the end of the Course, Student will be able to:

CO1: Explain historical background of the constitution making and its importance for building a democratic India

CO2: Compare the functioning of three wings of the government i.e.., executive, legislative and judiciary

CO3: Interpret the value of the fundamental rights and duties for becoming good citizen of India

CO4: Compare the decentralization of power between central, state and local self-government

CO5: Extend the knowledge in strengthening of the constitutional institutions like CAG, Election Commission and UPSC for sustaining democracy.

Mapping of Course Outcomes with Program Outcomes:

CO/PO	PO 1	PO 2	PO 3	PO 4	PO 5	PO 6	PO 7	PO 8	PO 9	PO 10	PO 11
CO1	-	-	-	-	3	-	-	1	2	-	-
CO2	-	-	-	-	2	-	-	1	3	-	-
CO3	-	-	-	-	3	-	-	2	3	-	-
CO4	-	-	-	-	3	-	-	2	1	-	-
CO5	-	-	-	-	2	-	-	1	3	-	-

UNIT – I

Introduction to Indian Constitution:

Constitution' meaning of the term, Indian Constitution - Sources and constitutional history, Features - Citizenship, Preamble, Fundamental Rights and Duties, Directive Principles of State Policy.

UNIT – II

Union Government and its Administration Structure of the Indian Union:

Federalism, Centre- State relationship, President: Role, power and position, PM and Council of ministers, Cabinet and Central Secretariat, Lok Sabha, Rajya Sabha, The Supreme Court and High Court: Powers and Functions.

UNIT – III

State Government and its Administration Governor:

Role and Position - CM and Council of ministers, State Secretariat: Organization, Structure and Functions

UNIT – IV
Local Administration:
District's Administration Head - Role and Importance, Municipalities - Mayor and role of Elected Representative - CEO of Municipal Corporation PanchayatiRaj: Functions PRI: Zila Panchayat, Elected officials and their roles, CEO Zila Panchayat: Block level Organizational Hierarchy - (Different departments), Village level - Role of Elected and Appointed officials - Importance of grass root democracy.

UNIT – V
Election Commission:
Election Commission- Role of Chief Election Commissioner and Election Commissionerate State Election Commission:, Functions of Commissions for the welfare of SC/ST/OBC and women.

Text Books:
1. Introduction to the Constitution of India, Durga Das Basu, Prentice – Hall of India Pvt. Ltd. New Delhi. ISBN: 978-9388548861.
2. Indian Constitution, Subash Kashyap, National Book Trust. ISBN: 9788123707341.

Reference Books:
1. Dynamics of Indian Government & Politics, J.A. Siwach. ISBN: 9788120709768.
2. Indian Government and Politics, D.C. Gupta. ISBN: 9780706987782.
3. Constitutional Law of India , H.M.Sreevai, 4th edition in 3 volumes (Universal Law Publication). ISBN: 9788194776529.

Web Links:
1. nptel.ac.in/courses/109104045/
2. nptel.ac.in/courses/101104065/

Research Methodology

(Common to CE, EEE, ME, ECE, CSE, IT, AIML, CSE(DS), PT &Min.E)

	L	T	P	C
Course Code: 2501AC03	**2**	**0**	**0**	**0**

Course Outcomes: At the end of the Course, Student will be able to:

CO1: Explain the characteristics and process of research.
CO2: Select the research problem by applying problem identification techniques.
CO3: Formulate and execute research design process.
CO4: Report the results of research process adhering to professional ethics.
CO5: Analyze the results of research using statistical measures of central tendancy

Mapping of Course Outcomes with Program Outcomes:

CO/PO	PO 1	PO 2	PO 3	PO 4	PO 5	PO 6	PO 7	PO 8	PO 9	PO 10	PO 11
CO1	1	-	-	2	-	-	-	-	-	2	1
CO2	1	-	-	2	-	-	-	-	-	2	1
CO3	1	-	-	2	-	-	-	-	-	2	1
CO4	1	-	-	2	-	-	-	3	-	2	1
CO5	1	-	-	2	2	-	-	-	-	2	1

UNIT – I
Meaning of Research:
Function of Research - Characteristics of Research – Steps involved in Research – Research in Pure and Applied Sciences - Inter Disciplinary Research. Factors which hinder Research – Significance of Research - Research and scientific methods – Research Process– Criteria of good Research – Problems encountered by Researchers – Literature review.

UNIT – II
Identification of Research Problem :
Selecting the Research problem – Necessity of defining the problem – Goals and Criteria for identifying problems for research. Perception of Research problem – Techniques involved in defining the problem.

UNIT – III
Research Design :
Formulation of Research design – Need for Research design – Features of a good design – Important concepts related to Research design.

UNIT – IV
Interpretation and Report Writing:
Meaning and Technique of interpretation – Precautions in interpretation – Significance of report writing – Different steps in writing a report – Layout of a Research report.

UNIT – V

Statistical Techniques and Tools :

Introduction of statistics – Functions – Limitations – Measures of central tendency - Arithmetic mean – Median – Mode – Standard deviation – Co-efficient of variation (Discrete serious and continuous serious) – Correlation – Regression.

Text Books:

1. Research Methodology Methods & Techniques, C.R. Kothari – New Age international Publishers, Reprint. ISBN: 9788122415223.
2. A Hand Book of Methodology of Research, Rajammall, P. Devadoss and K. Kulandaivel, RMM Vidyalaya press. ISBN: 9780367135720.

Reference Books:

1. Thesis and Assignment Writing, J. Anderson, Wiley Eastern Ltd. ISBN: 978-8126530755.
2. Research Methodology, Mukul Gupta, Deepa Gupta – PHI Learning Private Ltd., New Delhi. ISBN: 9788120349469.
3. Fundamentals of Mathematical statistics, S.C. Gupta and V.K. Kapoor, Sultan Chand & Sons, New Delhi. ISBN: 978-8180545283.

Web Links:

1. https://nptel.ac.in/courses/127106227
2. https://archive.nptel.ac.in/courses/121/106/121106007/

Intellectual Property Rights & Patents

(Common to CE, EEE, ME, ECE, CSE, IT, AIML, CSE(DS), PT &Min.E)

	L	T	P	C
Course Code: 2501AC04	**2**	**0**	**0**	**0**

Course Outcomes: At the end of the Course, Student will be able to:

CO1: Compare various types of Intellectual Property rights.
CO2: Discuss Intellectual Property and infer rights on such Intellectual Property owners
CO3: Explain the process of patenting
CO4: Apply for Trade marks and Copyrights.
CO5: Explain the methods to protect Trade secrets

Mapping of Course Outcomes with Program Outcomes:

CO/PO	PO 1	PO 2	PO 3	PO 4	PO 5	PO 6	PO 7	PO 8	PO 9	PO 10	PO 11
CO1	1	-	-	-	1	-	-	3	-	-	2
CO2	1	-	-	-	1	-	-	3	-	-	2
CO3	1	-	-	-	1	-	-	3	-	-	2
CO4	1	-	-	-	1	-	-	3	-	-	2
CO5	1	-	-	-	1	-	-	3	-	-	2

UNIT – I

Introduction to Intellectual Property Rights (IPR): Concept of Property - Introduction to IPR – International Instruments and IPR - WIPO - TRIPS – WTO –Laws Relating to IPR - IPR Tool Kit - Protection and Regulation - Copyrights and Neighboring Rights – Industrial Property – Patents - Agencies for IPR Registration – Traditional Knowledge –Emerging Areas of IPR – Layout Designs and Integrated Circuits – Use and Misuse of Intellectual Property Rights.

UNIT – II

Copyrights and Neighboring Rights: Introduction to Copyrights – Principles of Copyright Protection – Law Relating to Copyrights - Subject Matters of Copyright – Copyright Ownership – Transfer and Duration – Right to Prepare Derivative Works –Rights of Distribution – Rights of Performers – Copyright Registration – Limitations – Infringement of Copyright – Relief and Remedy – Case Law - Semiconductor Chip Protection Act.

UNIT – III

Patents: Introduction to Patents - Laws Relating to Patents in India – Patent Requirements – Product Patent and Process Patent - Patent Search - Patent Registration and Granting of Patent - Exclusive Rights – Limitations - Ownership and Transfer — Revocation of Patent – Patent Appellate Board - Infringement of Patent – Double Patenting — Patent Cooperation Treaty – New developments in Patents – Software Protection and Computer related Innovations.

UNIT – IV

Trademarks and Trade secrets: Introduction to Trademarks – Laws Relating to Trademarks – Functions of Trademark – Distinction between Trademark and Property Mark – Marks Covered under Trademark Law - Trade Mark Registration – Trade Mark Maintenance – Transfer of rights - Deceptive Similarities - Likelihood of Confusion - Dilution of Ownership – Trademarks Claims and Infringement – Remedies – Passing off Action - Introduction to Trade Secrets – General Principles - Maintaining Trade Secret – Physical Security – Employee Access Limitation – Employee Confidentiality Agreements.

UNIT – V

Cyber Law and Cyber Crime : Introduction to Cyber Law – Information Technology Act 2000 - Protection of Online and Computer Transactions - E-commerce - Data Security – Authentication and Confidentiality - Privacy - Digital Signatures – Certifying Authorities - Cyber Crimes - Prevention and Punishment – Liability of Network Providers. Relevant Cases Shall be dealt where ever necessary.

Text Books:

1. Fundamentals of IPR for Engineers- Kompal Bansal &Parishit Bansal, B. S. Publications (Press). ISBN: 9788178002774.
2. Intellectual Property -Deborah E.Bouchoux, Third Edition, Cengage Learning, New Delhi. ISBN: 0 340 67786 4.

Reference Books:

1. Intellectual property rights- Prabuddha Ganuli, Tata Mcgraw hill. ISBN: 978-0070077171.
2. Intellectual property rights M.Ashok kumar and Mohd.Iqbal Ali:, Serials Publications. ISBN: 9788183871648.
3. Intellectual Property Rights (Patents & Cyber Law), Dr. A. Srinivas. Oxford University Press, New Delhi. ISBN: 979-8886848229.
4. Intellectual Property- Richard Stim, Cengage Learning, New Delhi. ISBN: 978-0766826656.

Web Links:

1. http://www.wipo.int/portal/en/index.html
2. https://indiankanoon.org/
3. http://www.ipindia.nic.in/patents.htm
4. http://www.ipindia.nic.in/trade-marks.htm
5. http://copyright.gov.i

Indian Knowledge Systems (IKS)

(CE, EEE, ME, ECE, CSE, IT, AIML, CSE(DS), PT, Min. E)

	L	T	P	C
Course Code: 2501AC05	**2**	**0**	**0**	**0**

Course Outcomes:

At the end of the course, students will be able to:

CO1: Describe the foundations and scope of Indian Knowledge Systems.
CO2: Recognize major Indian contributions to knowledge, science, and culture.
CO3: Appreciate ethical values and sustainability rooted in Indian traditions.
CO4: Relate traditional knowledge to contemporary societal and technological needs.

Mapping of Course Outcomes with Program Outcomes:

CO/PO	PO 1	PO 2	PO 3	PO 4	PO 5	PO 6	PO 7	PO 8	PO 9	PO 10	PO 11
CO1	-	-	-	-	-	3	1	1	-	-	-
CO2	-	-	-	-	-	3	1	1	-	-	-
CO3	-	-	-	-	-	3	1	1	-	-	-
CO4	-	-	-	-	-	3	1	1	-	-	-
CO5	-	-	-	-	-	3	1	1	-	-	-

UNIT – I

Foundations of Indian Knowledge Systems

Meaning, scope, and importance of IKS. Sources of IKS: Vedas, Upanishads, Itihasas, Puranas, Shastras. Traditional Knowledge, Indigenous Knowledge, and Western Knowledge – comparison. Gurukula system and knowledge transmission traditions

UNIT – II

Indian Civilization and Philosophical Traditions

Overview of ancient Indian civilization (Indus Valley, Maurya, Gupta). Indian philosophical schools and ethical values. Epics: Ramayana and Mahabharata – cultural and moral significance. Religious traditions: Hinduism, Buddhism, Jainism, Sikhism

UNIT – III

Arts, Architecture and Cultural Expressions

Temple architecture: Nagara, Dravidian, Vesara. Mughal architecture and monuments. Indian classical dance forms and music traditions. Handicrafts, sculpture, painting, and iconography

UNIT – IV

Traditional Knowledge in Health, Environment and Sustainability

Ayurveda and Yoga – holistic health systems. Traditional agriculture and food practices. Water conservation methods and environmental ethics. Biodiversity conservation and sustainable living

UNIT – V

Traditional Knowledge and Contemporary Relevance

Protection of Traditional Knowledge.Traditional Knowledge (TK) and Intellectual Property Rights (overview). Role of government and national initiatives. Relevance of IKS to engineering, innovation, and entrepreneurship

Text Books:

1. **Indian Knowledge Systems**, Kapil Kapoor & Avadhesh Kumar Singh, D.K. Printworld (India) Pvt. Ltd., New Delhi. ISBN: 9788124608177.
2. **Indian Philosophy – Volume I & II**, S. Radhakrishnan, Oxford University Press, New Delhi. ISBN: 9780195698418.
3. **Science and Technology in Ancient India**, O.P. Jaggi, Atma Ram & Sons, Delhi. ISBN: 9788185694085.
4. **Indian Heritage and Culture,** Madhukar K. Bhagat, McGraw Hill Education (India). ISBN: 9789332901476.
5. **Traditional Knowledge System in India,** Yogendra K. Malik, Pearson Education India. ISBN: 9788131762219.

Reference Books:

1. **Ancient Indian Science and Technology**, Debiprasad Chattopadhyaya, History of Science, Philosophy and Culture in Indian Civilization Series. ISBN: 9788187586098.
2. **Indian Culture and Heritage**, Nitin Singhania, McGraw Hill Education. ISBN: 9789353161132.
3. **Knowledge Traditions of India**, Bhu Dev Sharma, Indian Council of Philosophical Research (ICPR). ISBN: 9788185636306.

Web Links:

1. https://iks.aicte-india.org/
2. https://www.education.gov.in/iks

Minor Stream Courses (MSC)

Minor Streams

- Minor Stream in VLSI
- Minor Stream in Embedded Systems
- Minor Stream in Signal Processing and Communication Technology
- Minor Stream in Space Technology
- Minor Stream in Technology for Digital Resilience Industry Integrated Program- L & T
- Minor Stream in Smart Infrastructure (Electronics) Industry Integrated Program- L & T

Minor Stream: VLSI

Course Code	Minor Stream Course	level	L	T	P	C	CIE	SEE	Total	Pre-requisite
2501EC86	Digital System Design through Verilog	IC	2		1	3	50	50	100	DE
2501EC26	Digital Design through system Verilog	AC	2		1	3	50	50	100	DDTV
2501EC23	CMOS Digital IC Design	IC	2	1		3	50	50	100	DE
2501EC27	FPGAs & ASIC Design	AC	3			3	50	50	100	DDTV
2501EC22	Design For Testability	IC	3			3	50	50	100	DDTV
2501EC30	Testing & Verification of VLSI Circuits	IC	3			3	50	50	100	VLSI
2501EC24	Analog VLSI Design	IC	2	1		3	50	50	100	VLSI
2501EC28	Low Power VLSI Design	AC	2	1		3	50	50	100	VLSI
2501EC29	SoC Design	AC	3			3	50	50	100	MPMC
2501EC25	CMOS Mixed signal IC Design	AC	2		1	3	50	50	100	CDIC, AVLSI
2501EC31	VLSI Physical Design	AC	2			2	50	50	100	LPVLSI
	Total		**26**	**3**	**3**	**32**				

Digital System Design through Verilog

	L	T	P	C
Course Code: 2501EC86	**2**	**0**	**1**	**3**

Course Outcomes: At the end of the Course, Students will be able to:

CO1: Develop RTL designs using Verilog HDL.
CO2: Apply timing-aware and low-power RTL coding practices.
CO3: Perform functional verification using testbenches.
CO4: Implement and analyze RTL designs on FPGA platforms.
CO5: Understand industry-standard digital system design flow.

The course emphasizes RTL design, verification, and FPGA-oriented implementation using Verilog HDL.

Mapping of Course Outcomes with Program Outcomes:

CO/PO	PO1	PO2	PO3	PO4	PO5	PO6	PO7	PO8	PO9	PO10	PO11
CO1	3	2			1						
CO2	3	3	2		2						
CO3	2	3	2	2	3						
CO4	2	2	3		3						2
CO5	2	2	3		2			2	2	2	2

Mapping of Course Outcomes with Program Specific Outcomes:

CO/PSO	PSO1	PSO2
CO1		2
CO2		3
CO3		3
CO4		3
CO5		2

UNIT – I

RTL Design Methodology: Review of digital design flow (Specifications, RTL, Verify, Synthesize, and Implement), RTL abstraction vs gate-level design, Coding styles: Combinational vs sequential RTL, Synchronous design concepts, Verilog-2001 features, Parameterized and reusable modules, Hierarchical & modular design practices.

Practice:

1. **Design parameterized and reusable modules using Verilog-2001 constructs.**
2. **Verify RTL functionality using basic testbench programs and waveform analysis.**

UNIT – II

Verilog Language Constructs: Data types: reg, wire, integer, genvar, generate blocks & scalable design, Tasks vs functions, Blocking vs non-blocking, Compiler directives & macros, Coding for synthesis vs simulation.

Practice:

1. **Implement scalable RTL designs using generate blocks and genvar.**
2. **Compare blocking vs non-blocking assignments using sequential logic examples.**

UNIT – III

Combinational Systems: Multi-bit adders (Ripple, Carry Look-Ahead) RTL level, ALU design, Priority encoders, barrel shifters.

Sequential Systems: Registers, counters, shift registers, Clocking strategies, reset strategies (Synchronous vs Asynchronous), FSM design (Mealy & Moore) using RTL templates.

Practice:

1. Implement an ALU with arithmetic and logical operations.
2. Implement registers using RTL templates.

UNIT – IV

Verification & Debug Techniques: Importance of verification, Testbench architecture, Self-checking testbenches, Tasks/functions in testbenches, File-based stimulus, Debugging using waveform analysis.

Practice:

1. Write testbenches using tasks, functions, and file-based stimulus**.**
2. Debug RTL designs using waveform analysis and assertion-style checks.

UNIT – V

Timing, Power & FPGA Implementation: RTL, Synthesis, Place & Route flow, Timing concepts: Setup & hold time, Clock skew & jitter, Low-power RTL techniques: Clock gating, Power-efficient coding, FPGA flow overview: Constraints basics, RTL mapping to hardware, Large Language Models (LLMs) for Verilog RTL generation.

Practice:

Text Books:

1. Verilog HDL: A Guide to Digital Design and Synthesis, Samir Palnitkar, 2nd Edition, Pearson Education India, ISBN: 978-8177583724.
2. Advanced Digital Design with Verilog HDL, Michael D. Ciletti, 2nd Edition, Pearson Education, ISBN: 978-0136019282.
3. FPGA Prototyping by Verilog Examples: Xilinx Spartan-3 Version, Pong P. Chu, 1st Edition, Wiley India, ISBN: 978-8126521517.
4. Synthesis and Scripting Techniques for Designing Multi-Clock Systems, Clifford E. Cummings, 1st Edition, Springer, ISBN: 978-0387294476.

Reference Books:

1. Digital Systems Design Using Verilog, Charles H. Roth Jr. and Lizy Kurian John, 2nd Edition, Cengage Learning, ISBN: 978-8131518465.
2. A Verilog HDL Primer, Bhasker J, 3rd Edition, Star Galaxy Publishing, ISBN: 978-0970954428.
3. Digital Design and Computer Architecture, David Harris and Sarah Harris, 2nd Edition, Morgan Kaufmann (Elsevier), ISBN: 978-0123944245.
4. Algorithms for VLSI Physical Design Automation, Naveen A. Sherwani, 3rd Edition, Springer, ISBN: 978-0792383932.
5. Huyen, Chip, Designing Machine Learning Systems: An Iterative Process for Production-Ready Applications, 1st Edition, O'Reilly Media, 2022, ISBN: 978-1098107963.
6. Chip Huyen, Designing Machine Learning Systems: An Iterative Process for Production-Ready Applications, 1st Edition, O'Reilly Media, 2022, ISBN: 978-1098107963.

Web Resources:

Tutorials & Learning**:**

1. **Verilog HDL Tutorial – ASIC World** https://asic-world.com/verilog/
2. **EEWeb Verilog HDL Tutorial** https://www.eeweb.com/verilog-hdl-tutorial/
3. **EDA Playground** https://www.edaplayground.com/

Simulation & Verification**:**

4. **ChipVerify – Verilog Quick Reference & Examples** https://www.chipverify.com/verilog/verilog_quick_ref

Synthesis & FPGA Tools**:**

4. **Xilinx Vivado Design Suite Documentation** https://www.xilinx.com/support/documentation/sw_manuals.html
5. **Intel (Altera) Quartus Prime Resources** https://www.intel.com/content/www/us/en/programmable/support/support-resources/design-software.html

Digital Design Through System Verilog

	L	T	P	C
Course Code:2501EC26	**2**	**0**	**1**	**3**

Course Outcomes:

At the end of the course, student will be able to:

CO1: Summarize the basics of system verilog HDL.
CO2: Develop various combinational circuit using system verilog HDL
CO3: Illustrate various asynchronous sequential circuits.
CO4: Make use of System Verilog concepts for sequential circuits design.
CO5: Interpret on various system model synthesis.

Mapping of Course Outcomes with Program Outcomes:

CO/PO	PO 1	PO 2	PO 3	PO 4	PO 5	PO 6	PO 7	PO 8	PO 9	PO 10	PO 11
CO1	3	2	-	-	1	-	-	-	-	-	1
CO2	2	1	3	1	2	-	-	-	-	-	1
CO3	3	2	-	1	3	-	-	-	-	-	1
CO4	2	1	2	-	2	-	-	-	-	-	1
CO5	2	3	1	1	2	-	-	-	-	-	1

Mapping of Course Outcomes with Program Specific Outcomes:

CO/PSO	PSO1	PSO2
CO1	-	3
CO2	-	3
CO3	-	3
CO4	-	3
CO5	-	3

UNIT- I

Introduction to System Verilog HDL: Verilog as HDL, Levels of Design Description, Concurrency, Simulation and Synthesis, Functional Verification, System Tasks, Programming Language Interface (PLI), Module, Simulation and Synthesis Tools.

Language Constructs and Conventions: Introduction, Keywords, Identifiers, White Space Characters, Comments, Numbers, Strings, Logic Values, Strengths, Data Types, Scalars and Vectors, Parameters, Operator

Practice:

1. Study and implementation of basic SystemVerilog constructs.
2. Design and simulation of arithmetic and logical operations. Develop a test bench to verify all operations and analyze the simulation results.

UNIT-II

Combinational Logic building blocks: Introduction, multiplexers, Decoders, parameterizable decoder, seven segment decoder, priority encoder, adders, parity checker, three state buffers, design using System Verilog,test benches for combinational blocks.

Practice:

1. Design and verification of Multiplexer. Develop a test bench to verify the functionality of the circuits through simulation.
2. Design and verification of Seven Segment Decoder. Develop a test bench to verify the correctness of outputs for all possible input combinations.

UNIT-III

Sequential Logic Design using system verilog: Latches and flip flops, Ring Counter, Johnson Counter, Design of Modulus-N Synchronous Counters, Shift Registers, Universal Shift Registers, Modeling of sequential circuits using System verilog.

Asynchronous Sequential design: Introduction, Asynchronous sequential circuits, design of asynchronous circuits, asynchronous state machines, setup and hold times, metastability using system verilog HDL.

Practice:

1. Design and implementation of Shift Registers.
2. Design and implementation of Counters.

UNIT-IV

Synchronous Sequential design: Basic synchronous sequential systems, model of synchronous sequential systems, algorithmic state machines, synthesis from ASM charts, state machine in system verilog, test benches for state machines and complex sequential systems.

Practice:

1. Design and implementation of Moore State Machine.
2. Design and implementation of Mealy State Machine.

UNIT-V

System verilog synthesis: Introduction, RTL synthesis-combinational logic, RTL synthesis rules, constraints-attributes, area and structural constraints, synthesis for FPGA, behavioural synthesis, timing simulations

Practice:

1. RTL Synthesis of Combinational and Sequential Circuits.
2. FPGA Implementation and Timing Simulation.

Text Books:

1. System Verilog for Design, Sturt Sutherland, Simon Davidmann, Peter flake,2nd Edition, ISBN: 9780387364957.
2. System Verilog Functional Verification, Sasaniman, Smith,1st Edition, ISBN : 9780981656212.

Reference Books:

1. Fundamentals of Logic Design with Verilog Design by Stephen.Brown and ZvonkoVranesic, TMH, 2nd Edition, ISBN: 978-0077211646.
2. Advanced Digital Logic Design using Verilog, State Machine & Synthesis for FPGA – Sunggu Lee, Cengage Learning, ISBN: 9780534551612.

Web Links:

1. http://nptel.ac.in/courses/117105080/ by Prof.D. Roy Chaudhry
2. http://nptel.ac.in/courses/117106086/1 by Prof.S.Srinivasan

CMOS Digital IC Design

	L	T	P	C
Course Code:2501EC23	**2**	**1**	**0**	**3**

Course Outcomes:

At the end of the course, student will be able to:

CO1: Summarize the design parameters of MOS logic.
CO2: Build combinational circuits using CMOS logic.
CO3: Build sequential circuits using CMOS logic.
CO4: Infer the dynamic characteristics of CMOS logic.
CO5: Analyze the semiconductor memories for logic design.

Mapping of Course Outcomes with Program Outcomes:

CO/PO	PO 1	PO 2	PO 3	PO 4	PO 5	PO 6	PO 7	PO 8	PO 9	PO 10	PO 11
CO1	3	2	-	-	-	-	-	-	-	-	1
CO2	3	2	-	-	-	-	-	-	-	-	1
CO3	3	2	-	-	-	-	-	-	-	-	1
CO4	3	2	1	-	-	-	-	-	-	-	1
CO5	3	2	1	-	-	-	-	-	-	-	1

Mapping of Course Outcomes with Program Specific Outcomes:

CO/PSO	PSO1	PSO2
CO1	-	2
CO2	-	2
CO3	-	2
CO4	-	2
CO5	-	2

UNIT – I
MOS Design:
Pseudo NMOS Logic: Inverter, Inverter threshold voltage, Output high voltage, Output Low voltage, Gain at gate threshold voltage, Transient response, Rise time, Fall time, Pseudo NMOS logic gates, Transistor equivalency, CMOS Inverter logic.

UNIT – II
Combinational MOS Logic Circuits:
MOS logic circuits with NMOS loads, Primitive CMOS logic gates – NOR & NAND gate, Complex Logic circuits design – Realizing Boolean expressions using NMOS gates and CMOS gates, AOI and OIA gates, CMOS full adder, CMOS transmission gates, Designing with Transmission gates.

UNIT – III

Sequential MOS Logic Circuits:

The behavior of bi-stable elements, SR Latch, Clocked latch and flip-flop circuits,CMOS D latch, and edge-triggered flip-flop.

UNIT – IV

Dynamic Logic Circuits:

Basic principle, Voltage Bootstrapping, Synchronous dynamic pass transistor circuits, Dynamic CMOS transmission gate logic, High-performance Dynamic CMOS circuits.

UNIT – V

Semiconductor Memories:

Types, RAM array organization, DRAM – Types, Operation, Leakage currents in DRAM cell and refresh operation, SRAM operation Leakage currents in SRAM cells, Flash Memory- NOR flash and NAND flash.

Text Books:

1. CMOS Digital Integrated Circuits Analysis and Design, Sung-Mo Kang, Yusuf Leblebici, TMH, 3rd Edition, ISBN: 9780072925074.
2. Digital Integrated Circuits, Jan M Rabaey, Pearson Education, 2nd Edition, ISBN: 9780130909961.

Reference Books:

1. Introduction to VLSI Systems: A Logic, Circuit and System Perspective, Ming - BO Lin, CRC Press, ISBN: 9781439868591.
2. Digital Integrated Circuits –A Design Perspective, JanM.Rabaey, Anantha Chandrakasan, Borivoje Nikolic, PHI, 2nd Edition, ISBN: 9789332573925.
3. Digital Integrated Circuit Design, Ken Martin, Oxford University Press, ISBN: 9780195125849.

Web Links:

1. https://subodhtripathi.files.wordpress.com/2012/01/0072460539cmos1.pdf
2. https://onlinecourses.nptel.ac.in/noc21_ee09

FPGAs & ASIC Design

	L	T	P	C
Course Code:2501EC27	**3**	**0**	**0**	**3**

Course Outcomes:

At the end of the course, student will be able to:

CO1: Compare the performance of different FPGAs and their programming Technologies.
CO2: Identify different SRAM and Anti-Fuse programmable FPGA architectures.
CO3: Develop digital circuits with ACT architectures.
CO4: Illustrate the different types of ASICs with I/O modules and their interconnects.
CO5: Explain the construction, simulation and testing of ASICs.

Mapping of Course Outcomes with Program Outcomes:

CO/PO	PO 1	PO 2	PO 3	PO 4	PO 5	PO 6	PO 7	PO 8	PO 9	PO 10	PO 11
CO1	2	3	-	-	-	-	-	-	-	-	1
CO2	2	3	-	-	-	-	-	-	-	-	1
CO3	1	2	3	-	-	-	-	-	-	-	1
CO4	3	2	-	-	-	-	-	-	-	-	1
CO5	3	2	-	-	-	-	-	-	-	-	1

Mapping of Course Outcomes with Program Specific Outcomes:

CO/PSO	PSO1	PSO2
CO1	-	2
CO2	-	2
CO3	-	2
CO4	-	2
CO5	-	2

UNIT – I

Field Programmable Gate Arrays:

Organization of FPGAs, FPGA Programming Technologies, Programmable Logic Block Architectures, Programmable Interconnects, Programmable I/O blocks in FPGAs, Dedicated Specializd Components of FPGAs, Applications of FPGAs.

UNIT – II

Programming FPGAs:

SRAM Programmable FPGAs, Introduction, Programming Technology, Device Architecture, The Xilinx XC2000, XC3000 and XC4000 Architectures. ACT FPGA Architectures: Anti-Fuse Programmed FPGAs, Introduction, Programming Technology, Device Architecture, TheActel AC1, AC2and ACT3 Architectures.

Applications:
Design Applications, General Design Issues, Counter Examples, A Fast Video Controller, A Position Tracker for a Robot Manipulator, A Fast DMA Controller, Designing Counters with ACT devices.

UNIT – III
Introduction to ASICs: Types of ASICs, Design Flow, Case Study, Economics of ASICs, ASIC Cell Libraries, Transistors as resistors, Transistor Parasitic Capacitance, Logical Effort, Library Cell Design, Library Architecture, Gate-Array Design, Standard Cell Design, Data Path Cell Design.

UNIT – IV
Programable ASICs and Programable ASIC Logic Cells:
The Anti fuse, Static RAM, EPROM and EEPROM Technology, Practical Issues, Specifications, PREDP Benchmarks, FPGA Economics, Actel ACT, Xilinx LCA, Altera Flex, Altera Max, DC Output, AC Output, DC input, AC input, Clock input, Power input, Xilinx I/O block, Other I/O Cells. Low Level Design Entry and Logic Synthesis: Schematic Entry, Low level Design Languages, PLA Tools, EDIF, A logic synthesis example, A Comparator/MUX, Inside a Logic Synthesizer, Synthesis of Viterbi Decoder, Verilog and Logic synthesis, VHDL and Logic Synthesis, Finite State Machine Synthesis, Memory Senthesis, The Engine Controller, Performance Driven Synthesis, Optimization of the viterbi decoder.

UNIT – V
Simulation, Test and ASIC Construction:
Types of Simulation, The Comparator/MUX Example, Logic Systems, How Logic Simulation Works, Cell Models, Delay Models, Static Timing Analysis, Formal Verification, Switch Level Simulation, Transistor Level Simulation, The importance of test, Boundary Scan Test, Faults, Faults Simulation, Automatic Test Pattern Generator, Scan Test, Built in Self Test, A simple test Example, Physical Design, CAD Tools, System Partitioning, Estimating ASIC Size, Power Dissipation, FPGA Partitioning, Partitioning Methods.

Text Books:
1. Field Programmable Gate Array Technology, Stephen M. Trimberger, Springer International Edition,ISBN: 978-1461361831.
2. Application Specific Integrated Circuits, Michael John Sebastian Smith, Pearson Education, ISBN : 978-8177584080.

Reference Books:
1. Digital Design Using Field Programmable Gate Arrays, Pak K. Chan/Samiha Mourad, Pearson Low Price Edition,ISBN: 9788131724408.
2. Advanced ASIC Chip Synthesis using Synopsis Design compiler, Himanshu Bhatnagar, Kluwer Academic, 2nd Edition,ISBN: 9780792385370.

Web Links:

1. https://nptel.ac.in/courses/117108040
2. http://www.eng.ucy.ac.cy/theocharides/Courses/ECE664/L5.pdf

Design for Testability

	L	T	P	C
Course Code:2501EC22	**3**	**0**	**0**	**3**

Course Outcomes:

At the end of the course, student will be able to:

CO1: Interpret the fault modeling and logic simulation.
CO2: Develop test pattern for combinational logic circuits.
CO3: Develop test pattern for sequential logic circuits.
CO4: Outline the testable sequential circuits.
CO5: Outline the testable memory circuits.

Mapping of Course Outcomes with Program Outcomes:

CO/PO	PO 1	PO 2	PO 3	PO 4	PO 5	PO 6	PO 7	PO 8	PO 9	PO 10	PO 11
CO1	3	2	-	-	-	-	-	-	-	-	1
CO2	3	2	-	-	-	-	-	-	-	-	1
CO3	3	2	-	-	-	-	-	-	-	-	1
CO4	3	2	1	-	-	-	-	-	-	-	1
CO5	3	2	1	-	-	-	-	-	-	-	1

Mapping of Course Outcomes with Program Specific Outcomes:

CO/PSO	PSO1	PSO2
CO1	-	2
CO2	-	2
CO3	-	2
CO4	-	2
CO5	-	2

UNIT – I

Introduction to Testing:

Testing Philosophy, Role of Testing, Digital and Analog VLSI Testing, VLSI Technology Trends affecting Testing, Types of Testing, Fault Modeling: Defects, Errors and Faults, Functional Versus Structural Testing, Levels of Fault Models, Single Stuck-at Fault.

UNIT – II

Logic and Fault Simulation:

Simulation for Design Verification and Test Evaluation, Modeling Circuits for Simulation, Algorithms for True value Simulation, Algorithms for Fault Simulation

UNIT – III

SCOAP Controllability and Observability, High Level Testability Measures, Digital DFT and Scan Design: Ad-Hoc DFT Methods, Scan Design, Partial-Scan Design, Variations of Scan.

UNIT – IV

Built-In Self-Test:

The Economic Case for BIST, Random Logic BIST: Definitions, BIST Process, Pattern Generation, Response Compaction, Built-In Logic Block Observers, Test-Per- Clock, Test-Per-Scan BIST Systems, Circular Self-Test Path System, Memory BIST, Delay Fault BIST.

UNIT – V

Boundary Scan Standard:

Motivation, System Configuration with Boundary Scan: TAP Controller and Port,Boundary Scan Test Instructions, Pin Constraints of the Standard, Boundary Scan Description Language: BDSL Description Components, Pin Descriptions.

Text Books:

1. Essentials of Electronic Testing for Digital, Memory and Mixed Signal VLSI Circuits -M.L. Bushnell, V. D. Agrawal, Kluwer Academic Pulishers, ISBN: 9780792379911.
2. Digital Systems and Testable Design, M. Abramovici, M.A.Breuer and A.D Friedman, Jaico Publishing House, ISBN: 0-9660176-3-3.

Reference Books:

1. Digital Circuits Testing and Testability - P.K. Lala, Academic Press, ISBN: 9780124343306.
2. Digital Systems and Testable Design - M. Abramovici, M.A.Breuer and A.D.Friedman, Jaico Publishing House, ISBN: 0-9660176-3-3.

Web Links:

1. https://www.slideshare.net/labishettybhanu/trends-and-challenges-in-vlsi
2. http://www.engr.uconn.edu/~tehrani/teaching/test
3. http://nptel.ac.in/courses/106103116/34
4. http://eesemi.com/bist.html

Testing & Verification of VLSI Circuits

	L	T	P	C
Course Code:2501EC30	**3**	**0**	**0**	**3**

Course Outcomes:

At the end of the course, student will be able to:

CO1: Infer the challenges in VLSI Testing at different abstraction levels.
CO2: Explain the fault models for generation of test vectors.
CO3: Analyze the observability and controllability parameters of circuit.
CO4: Make use of simulation techniques for designing and testing of VLSI circuits.
CO5: Identify characteristics of verification methods.

Mapping of Course Outcomes with Program Outcomes:

CO/PO	PO 1	PO 2	PO 3	PO 4	PO 5	PO 6	PO 7	PO 8	PO 9	PO 10	PO 11
CO1	1	1	-	-	-	-	-	-	-	-	1
CO2	1	1	-	-	-	-	-	-	-	-	1
CO3	1	1	-	-	-	-	-	-	-	-	1
CO4	2	2	2	-	-	-	-	-	-	-	1
CO5	2	2	-	-	-	-	-	-	-	-	1

Mapping of Course Outcomes with Program Specific Outcomes:

CO/PSO	PSO1	PSO2
CO1	-	2
CO2	-	2
CO3	-	2
CO4	-	2
CO5	-	2

UNIT – I
Basics of Testing:
Fault models, Combinational logic and fault simulation, Test generation for Combinational Circuits. Current sensing-based testing. Classification of sequential ATPG methods. Fault collapsing and simulation.

UNIT – II
Universal test sets: Pseudo-exhaustive and iterative logic array testing. Clocking schemes for delay fault testing. Testability classifications for path delay faults. Test generation and fault simulation for path and gate delay faults.

UNIT – III

Delay fault testing:

Introduction, Combinational test generation, Combinational fault simulation, Combinational delay fault diagnosis, Sequential test generation, Sequential fault simulation, Pitfalls in delay fault testing and some remedies, Unconventional delay fault testing techniques. CMOS testing: Testing of static and dynamic circuits. Fault diagnosis: Fault models for diagnosis, Cause- effect diagnosis, Effect-cause diagnosis.

UNIT – IV

High-level test synthesis:

Introduction, RTL test generation, RTL fault simulation, RTL design for testability, RTL built-in self-test, Behavioral modification for testability, Behavioral synthesis for testability.

UNIT – V

Verification Techniques:

Introduction to Hardware Verification and methodologies Binary Decision Diagrams (BDDs) and algorithms over BDDs Combinational equivalence checking Temporal Logics modelling sequential systems and model checking Symbolic model checking.

Text Books:

1. Testing of Digital Systems,N. Jha & S.D. Gupta, Cambridge, ISBN: 0 521 77356 3.
2. VLSI Test Principles and Architectures Design for Testability,W.W.Wen,Morgan Kaufmann Publishers,ISBN:978-0123705976.

Reference Books:

1. Essentials of Electronic Testing for Digital, memory & Mixed signal VLSI Circuits, Michael L. Bushnell &Vishwani D. Agrawal, Kluwar Academic Publishers, ISBN: 9780792379911.
2. Digital circuit Testing and Testability, P. K. Lala, Academic Press, ISBN: 9780124343306.

Web Links:

1. https://archive.nptel.ac.in/courses/106/103/106103116
2. https://www.maven-silicon.com/blog/difference-between-vlsi-verification-and-vlsi-testing/

Analog VLSI Design

	L	T	P	C
Course Code:2501EC24	**2**	**1**	**0**	**3**

Course Outcomes:

At the end of the course, student will be able to:

CO1: Illustrate the MOS I/V, C-V Characteristics & Single Stage amplifie.
CO2: Analyze the characteristics of CMOS differential Amplifier & Current Mirrors.
CO3: Develop the knowledge of Bandgap Reference.
CO4: Analyze the two stage CMOS operational amplifiers.
CO5: Develop basic Analog layout &CMOS Processing based knowledge acquired in the course.

Mapping of Course Outcomes with Program Outcomes:

CO/PO	PO 1	PO 2	PO 3	PO 4	PO 5	PO 6	PO 7	PO 8	PO 9	PO 10	PO 11
CO1	3	1	-	-	-	-	-	-	-	-	1
CO2	1	3	-	2	-	-	-	-	-	-	1
CO3	1	3	2	2	-	-	-	-	-	-	1
CO4	2	3	2	-	-	-	-	-	-	-	1
CO5	2	2	3	-	-	-	-	-	-	-	1

Mapping of Course Outcomes with Program Specific Outcomes:

CO/PSO	PSO1	PSO2
CO1	-	1
CO2	-	3
CO3	-	2
CO4	-	3
CO5	-	3

UNIT – I

Introduction to Analog Design- Basic MOS Device Physics, MOSFET Structure, MOS I/V Characteristics, MOS Transconductance,Second-Order Effects, MOS Device Capacitances. Single-Stage Amplifiers- Common-Source Stage with Resistive Load, CS Stage with Diode-Connected Load , CS Stage with Current-Source Load.

UNIT – II

Differential Amplifier- Basic Differential Pair, Qualitative Analysis, Common-Mode Response. Differential Pair with MOS Load. Current Mirrors and Biasing Techniques- Basic Current Mirrors, Cascode Current Mirrors, Active Current Mirrors-Large Signal Analysis, Small Signal Analysis, Biasing Techniques – CS biasing, CG Biasing .

UNIT – III

Band Gap References:

GeneralConsiderations, Supply-Independent Biasing, Temperature-Independent References, PTAT Current Generation, Constant-Gm Biasing, Low-Voltrage Band Gap References.

UNIT – IV

MOS Operational Amplifier:

General Considerations, One-Stage Op Amps, Two-Stage Op Amps, Gain Boosting, Output Swing Calculation, Common Mode Feedback– Basic Concepts, CM sensing Techniques, CM feedback Techniques, Input Range Limitations, Sle Rate, Power Supply Rejection.

UNIT – V

CMOS Processing Technology:

General Considerations, Photolithography, Oxidation, Ion Implantation, Deposition and Etching. Analog Layout Techniques- Antenna Effect ,Multifinger Transistors,Well Proximity Effect, Latch Up Prevention.

Text Books:

1. Design of Analog CMOS Integrated Circuits by Behzad Razavi 2nd Edition, ISBN:9780071188395, 0071188398 .
2. R.Jacob Baker,H.W.Li, and D.E. Boyce CMOS Circuit Design,Layout and Simulation, Prentice-Hall of India, ISBN:9781118038239, 1118038231 .

Reference Books:

1. Analog Integrated Circuit Design- David A. Johns, Ken Martin, Wiley Student Edn,ISBN:9788126517787, 8126517786
2. Analysis and Design of Analog Integrated Circuits, ISV byMeyer Gray,Hurst,Lewis. 5thEditio, ISBN:9788126521487, 8126521481 .

Web Links:

1. https://onlinecourses.nptel.ac.in/noc23_ee142
2. https://nptel.ac.in/courses/117101105

Low Power VLSI Design

	L	T	P	C
Course Code:2501EC28	**2**	**1**	**0**	**3**

Course Outcomes:

At the end of the course, student will be able to:

CO1: Outline the fundamentals of low-power logic design.
CO2: Interpret low-power design approaches.
CO3: Interpret the constraints for low power design through CAD Tools.
CO4: Contrast adder architectures for the efficient subsystem design.
CO5: Outline the low-power multiplier architectures.

Mapping of Course Outcomes with Program Outcomes:

CO/PO	PO 1	PO 2	PO 3	PO 4	PO 5	PO 6	PO 7	PO 8	PO 9	PO 10	PO 11
CO1	3	2	-	-	-	-	-	-	-	-	1
CO2	3	2	-	-	-	-	-	-	-	-	1
CO3	3	2	-	-	-	-	-	-	-	-	1
CO4	3	2	1	-	-	-	-	-	-	-	1
CO5	3	2	1	-	-	-	-	-	-	-	1

Mapping of Course Outcomes with Program Specific Outcomes:

CO/PSO	PSO1	PSO2
CO1	-	2
CO2	-	2
CO3	-	2
CO4	-	2
CO5	-	2

UNIT – I
Introduction:
Introduction to Low Power VLSI design, Importance of low power design, Challenges in low power VLSI design, Application of Low Power VLSI circuits, Power analysis of CMOS circuits, Themes of Low Power VLSI design, Supply voltage scaling, Reduction of load capacitances.

UNIT – II
Low Voltage Process Technology and Device Modelling:
CMOS device structure and process fabrication, Innovation on process technology for low power consumption, Multi-threshold process technology, Latch up problem in CMOS technology, Discussion on SPICE Models of MOS transistor, MOS Capacitances, CMOS Low voltage analytical model, Threshold voltage definitions, Different Short Channel Effects.

UNIT – III

Techniques for low power design at Logic Design Level:

CMOS logic design style, CMOS Inverter design, Transfer characteristics of CMOS inverter, Delay calculation of CMOS Logic gates, Analysis of various logic design styles for their power consumption (CPL, Domino Logic, NORA CMOS, TSPC Logic, DCVSL, etc.).

UNIT – IV

Low power design techniques at Architectre and System Level:

Importance of parallelism, Introduction to Pipelining, Low power design utilizing redundancy and Data Encoding, Importance of Regularity and Locality, Reduction of complexity to improve power consumption, Low power design techniques at system level.

UNIT – V

Low Power Random Access Memory Circuits:

Introduction to Static RAM Design, Low power Bit-line Conditioning Circuits, Low Power Techniques, Sense Amplifiers, Dynamic RAM Design, Bit line capacitance reduction methodologies, Self-Refresh Techniques, Low Voltage DRAM Operations, and Leakage Power Analysis.

Text Books:

1. Low-power CMOS digital design, A.P.Chandrakasan and R.W.Broderson, Low Power CMOS Design, IEEE Press, ISBN:ISBN: 978-1-4615-2325-3.
2. Low-Power Digital VLSI Design: Circuits and Systems, A. Bellaouar and M. I. Elmasry, Springer, ISBN:ISBN : 9780792395874.

Reference Books:

1. Low-Power VLSI Circuits and Systems, Ajit Pal, Springer, ISBN:ISBN: 9788132219361.
2. Low Power Design Methodologies, Jan M. Rabaey, Massoud Pedram, Springer Science+Business Media,LLC, ISBN: ISBN: 978-1-46 13-5975-3.

Web Links:

1. https://www.synopsys.com/glossary/what-is-low-power-design.html
2. https://resources.system-analysis.cadence.com/blog/msa2021-implementing-low-power-design-through-voltage-scaling-in-vlsi
3. https://link.springer.com/book/10.1007/978-1-4615-2355-0

SoC Design

	L	T	P	C
Course Code:2501EC29	**3**	**0**	**0**	**3**

Course Outcomes:

At the end of the course student will be able to:

CO1: Explain all the building blocks of SoC.
CO2: Classify the concept of processors and instruction handling.
CO3: Analyze vector, VLIW and superscalar processors.
CO4: Develop a Memory as part of SoC.
CO5: Illustrate the concepts of interconnect optimization and configuration in SoC.

Mapping of Course Outcomes with Program Outcomes:

CO/PO	PO 1	PO 2	PO 3	PO 4	PO 5	PO 6	PO 7	PO 8	PO 9	PO 10	PO 11
CO1	3	1	-	-	-	-	-	-	-	-	1
CO2	3	2	-	-	-	-	-	-	-	-	1
CO3	2	2	1	-	-	-	-	-	-	-	1
CO4	2	2	2	-	-	-	-	-	-	-	1
CO5	2	2	1	-	-	-	-	-	-	-	1

Mapping of Course Outcomes with Program Specific Outcomes:

CO/PSO	PSO1	PSO2
CO1	-	2
CO2	-	2
CO3	-	2
CO4	-	2
CO5	-	2

UNIT – I
Introduction to the System Approach:
System Architecture, Components of the system, Hardware & Software, Processor Architectures, Memory and Addressing. System level interconnection, An approach for SOC Design, System Architecture and Complexity.

UNIT – II
Processors:
Introduction , Processor Selection for SOC, Basic concepts in Processor Architecture, Basic concepts in Processor Micro Architecture, Basic elements in Instruction handling. Buffers:minimizing Pipeline Delays, Branches, More Robust Processors, Vector Processors and Vector Instructions extensions, VLIW Processors, Superscalar Processors.

UNIT – III
Memory Design for SOC:

Overview of SOC external memory, Internal Memory, Size, Scratchpads and Cache memory, Cache Organization, Cache data, Write Policies, Strategies for line replacement at miss time, Types of Cache, Split – I, and D – Caches, Multilevel Caches, Virtual to real translation , SOC Memory System, Models of Simple Processor – memory interaction.

UNIT – IV

Interconnect Customization:

Inter Connect Architectures, Bus: Basic Architectures, SOC Standard Buses, Analytic Bus Models, Using the Bus model, Effects of Bus transactions and contention time. SOC Customization: An overview, Customizing Instruction Processor.

UNIT – V

Interconnect Configuration:

Reconfiguration Technologies, Mapping design onto Reconfigurable devices, Instance Specific design, Customizable Soft Processor, Reconfiguration – overhead analysis and trade-off analysis on reconfigurable Parallelism.

Text Books:

1. Computer System Design System-on-Chip, Michael J. Flynn and Wayne Luk, Wiley India Pvt. Ltd,ISBN: 978-0470643365.
2. ARM System on Chip Architecture, Steve Furber, Addison Wesley Professional, 2nd Edition, ISBN : 9780201675191 .

Reference Books:

1. Design of System on a Chip: Devices and Components, Ricardo Reis, Springer 1st Edition, ISBN: 978-1441954541.
2. Co-Verificationof Hardware and Software for ARM System on Chip Design (Embedded Technology), Jason Andrews, Newnes, BK and CDROM, ISBN: 978-0750677301.
3. System on Chip Verification–Methodologies and Techniques, Prakash Rashinkar, Peter Paterson and Leena Singh L, Kluwer Academic Publishers, ISBN: 978-0792372790.

Web Links:

1. https://www.peterindia.net/System-On-ChipLinks.html
2. https://www.ieee-socc.org/
3. http://nptel.ac.in/courses/108102045/10 (Prof. Santanu Chaudhary, IIT Delhi)

CMOS Mixed Signal IC Design

	L	T	P	C
Course Code:2501EC25	**2**	**0**	**1**	**3**

Course Outcomes:

At the end of the course, student will be able to:

CO1: Infer the characteristics of CMOS based Switched capacitor and PLL.
CO2: Analyze the performance of sampling circuits.
CO3: Demonstrate the non idealities of data converters.
CO4: Apply appropriate techniques and tools in development of data converters.
CO5: Model the frequency and Q tunable time domain filters.

Mapping of Course Outcomes with Program Outcomes:

CO/PO	PO 1	PO 2	PO 3	PO 4	PO 5	PO 6	PO 7	PO 8	PO 9	PO 10	PO 11
CO1	3	2	-	-	2	-	-	1	1	-	1
CO2	3	2	-	-	2	-	-	1	1	-	1
CO3	3	2	-	-	2	-	-	1	1	-	1
CO4	1	2	3	-	2	-	-	1	1	-	1
CO5	1	2	3	-	2	-	-	1	1	-	1

Mapping of Course Outcomes with Program Specific Outcomes:

CO/PSO	PSO1	PSO2
CO1	-	2
CO2	-	2
CO3	-	2
CO4	-	2
CO5	-	2

UNIT – I
PLL & Switched Capacitors:
Characterization of a comparator, Basic CMOS comparator design, Analog multiplier, PLL – simple PLL, charge-pump PLL, applications of PLL, Switched Capacitor circuits – basic principles, switched capacitor sensitive integrator and insensitive integrator, switched capacitor filter, switched capacitor amplifier.
Practice:

1. Design of PLL
2. Design of switched capacitor circuits.

UNIT – II
Sampling Circuits:
Basic sampling circuits for Analog signal sampling, performance metrics of sampling circuits, different types of sampling switches. Sample-and-Hold Architectures: Open-loop &closed-loop architectures, open-loop architecture with miller capacitance, multiplexed-input architectures, recycling architecture.

Practice:

1. Design Sample hold circuit.
2. Estimation of open loop Miller capacitance.

UNIT – III

Digital-to-Analog Conversion:

Input/output characteristics of an ideal D/A converter, performance metrics of D/A converter, Resistor string 3-bit DAC, Binary scale DACs, Cyclic DAC. D/A Converter architectures: Resistor-Ladder architectures, current-steering, Pipeline DAC.

Practice:

1. Design of basic DAC.
2. Design of Resistor string 3-bit DAC.

UNIT – IV

Analog-To-Digital Conversion:

Input/output characteristics and quantization error of an A/D converter, performance metrics of A/D converter. A/D converter architectures: Flash architectures, interpolate and folding architectures, pipelined architectures, Ramp type ADC, Integrating (Dual slope) ADC, Successive approximation architectures, Sigma Delta ADC , Design of Decimation filter.

Practice:

1. Design of basic ADC.
2. Design of Successive approximation ADC.

UNIT – V

Analog CMOS Filters :

Low Pass filters, active–RC fully differential integrator, Two transistor MOSFET– C integrator, gm-C Integrator, Active RC integrators.

Practice:

1. Design of first order filters.
2. Design of Gm-C Integrator.

Text Books:

1. Design of Analog CMOS Integrated Circuits, B.Razavi, 2nd Edition, McGrawHill, ISBN: 9780072524932.

2. CMOSMixed-Signal Circuit Design, JacobBakeret, IEEEPress, ISBN: 9780471227540.

Reference Books:

1. Analog MOS Integrated Circuit for signal processing,R Gregorian,G.C.Temes,JohnWiley&Sons, ISBN: 978-0-471-09797-6.
2. Understanding Delta-Sigma Data Converters, Schreier & Themes, Wiley –IEEE Press, ISBN: 9781119258292.

Web Links:

1. https://ioe.iitm.ac.in/project/rf-analog-and-mixed-signal-integrated-circuits
2. https://link.springer.com/chapter/10.1007/978-0-387-35597-9_29
3. https://www.ims.fraunhofer.de/en/Core-Competence/Smart-Sensor-Systems/Integrated-Sensor-Systems/Mixed-Signal-IC-Design.html

VLSI Physical Design

	L	T	P	C
Course Code:2501EC31	**2**	**0**	**0**	**2**

Course Outcomes:

At the end of the course, student will be able to:

CO1: Explain the VLSI physical design cycle at various levels of abstraction
CO2: Choose different algorithms for system partitioning.
CO3: Develop floor planning for different VLSI Circuits.
CO4: Make use of placement & routing algorithms for placement and routing purpose.
CO5: Explain the concepts of timing closure involved in placement &routing..

Mapping of Course Outcomes with Program Outcomes:

CO/PO	PO 1	PO 2	PO 3	PO 4	PO 5	PO 6	PO 7	PO 8	PO 9	PO 10	PO 11
CO1	3	2	-	-	-	-	-	-	-	-	-
CO2	2	3	-	-	-	-	-	-	-	-	-
CO3	2	1	3	1	-	-	-	-	-	-	-
CO4	1	1	3	1	-	-	-	-	-	-	-
CO5	2	2	-	-	-	-	-	-	-	-	-

Mapping of Course Outcomes with Program Specific Outcomes:

CO/PSO	PSO1	PSO2
CO1	-	2
CO2	-	2
CO3	-	2
CO4	-	2
CO5	-	2

UNIT- I
Introduction to physical design automation
VLSI design flow, Physical design cycle, design styles, Layout layers and design rules, Physical design optimizations

UNIT- II
Net list and system partitioning
Introduction, terminology, optimization goals, partitioning algorithms, a frame work for multi level partitioning

UNIT-III
Floor planning

Introduction to floor planning, optimization goals, terminology, floor plan representations, floor planning algorithms, pin assignment, power and ground routing.

UNIT-IV

Placement & Routing: Global placement, Representation of routing regions, The global routing flow, single net routing, full net list routing, Detailed routing- horizontal and vertical constraints graph, channel routing algorithms, switch box routing.

UNIT-V

Timing Closure: Introduction, timing analysis and performance constraints, timing driven placement, timing driven routing

Text Books:

1. VLSI Physical Design: From Graph Partitioning to Timing Closure-Andrew B. Kahng, Jens Lienig, Igor L. Markov, Jin Hu ,Springer, ISBN: 978-94-007-9020-9.
2. VLSI Physical Design Automation Theory and Practice by Sadiq M. Sait, Habib Youssef, world scientific, ISBN : 9789810238834.

Reference Books:

1. Modern VLSI DesignSystem-on-Chip Design by Wayne Wolf, Pearson education, 3rdEdition, ISBN: 978-8178086538.
2. Analog Integrated Circuit Design AutomationPlacement, Routing and Parasitic Extraction Techniques by Ricardo Martins, Nuno Lourenço, Nuno Horta, springer international publishing, ISBN: 978-3319816685.

Web Links:

1. https://nptel.ac.in/courses/106105161 - by Prof. Indranil Sen Gupta, IIT Khargpur.
2. https://nptel.ac.in/courses/117101004 - by Prof.D.K.Sharma, Prof. Sachin Patkar,Prof. Virendra singh, Prof.A.N.Chandorkar, IIT Bombay.
3. https://nptel.ac.in/courses/117103125 - by Dr.Santosh Biswas, IIT Guwahati.

Minor Stream: Embedded Systems

Course Code	Course Name	Level	L	T	P	C	CIE	SEE	Total	Pre-requisite
2501EC37	Sensors & Actuators	FC	3			3	50	50	100	-
2501EC40	Embedded C	IC	2		1	3	50	50	100	-
2501EC36	Hardware interfacing & Networking	IC	3			3	50	50	100	-
2501EC38	Microcontrollers for Embedded Systems	IC	3			3	50	50	100	MPMC
2501EC32	Embedded Real Time Systems	AC	3			3	50	50	100	-
2501EC42	Wireless LANs & PANs	IC	3			3	50	50	100	-
2501EC39	System Programming	AC	3			3	50	50	100	-
2501EC34	Embedded System Design	AC	3			3	50	50	100	-
2501EC41	Real Time operating System using QNX	AC	0	0	2	2	50	50	100	ERTS
2501EC33	Machine Learning for Embedded Systems	AC	3			3	50	50	100	-
2501EC35	Hardware & Software Co-Design	AC	3			3	50	50	100	-
	Total		**29**		**3**	**32**				

Sensors & Actuators

	L	T	P	C
Course Code: 2501EC37	**3**	**0**	**0**	**3**

Course Outcomes:

At the end of the course, student will be able to:

CO1: Explain fundamentals of sensors and measurement systems.
CO2: Analyze resistive, capacitive, and inductive sensors.
CO3: Describe optical and modern sensors.
CO4: Explain signal conditioning and sensor interfacing.
CO5: Describe actuators and their applications.

Mapping of Course Outcomes with Program Outcomes:

CO/PO	PO 1	PO 2	PO 3	PO 4	PO 5	PO 6	PO 7	PO 8	PO 9	PO 10	PO 11
CO1	3	1									
CO2	3	2	1								
CO3	3	2									
CO4	2	2	1								
CO5	2	1	1								

Mapping of Course Outcomes with Program Specific Outcomes:

CO/PSO	PSO1	PSO2
CO1	2	1
CO2	2	1
CO3	2	1
CO4	2	2
CO5	2	2

The course is covered at a conceptual level with emphasis on working principles, block diagrams, and applications. Detailed mathematical derivations and implementation-level complexities are excluded.

UNIT – I

Fundamentals of Sensors and Measurement:

Introduction to sensors, transducers, and actuators; Differences between sensors, transducers, and actuators; Measurement system components; Classification of sensors (active/passive, analog/digital); Static characteristics (accuracy, precision, sensitivity, and linearity); Dynamic characteristics (response time and bandwidth); Error analysis and calibration.

UNIT – II

Resistive, Capacitive and Inductive Sensors:
Resistive sensors: potentiometer, strain gauge; Temperature sensors: RTD, thermistor; Capacitive sensors: principle, construction, and applications; Inductive sensors: LVDT (working principle and characteristics); Comparison of sensor types (resistive, capacitive, inductive); Advantages, limitations, and selection criteria.

UNIT-III

Optical and Application-Based Sensors:
Optical sensors: photodiode, LDR; Infrared sensors: principle and applications; Ultrasonic sensors: time-of-flight concept; Magnetic sensors: Hall effect sensor; Motion sensors: accelerometer and Gyroscope (working principle and applications); Introduction to smart sensors (features and advantages) and MEMS sensors (basic concept, structure, and applications).

UNIT- IV

Signal Conditioning and Sensor Interfacing:
Need for signal conditioning; Sensor signal characteristics (low-level signals, noise, impedance); Instrumentation amplifier for sensor applications; Signal conditioning for resistive and capacitive sensors; Isolation and impedance matching; Noise reduction techniques (shielding, grounding, and filtering); Data acquisition system (block diagram and working); Multiplexing in data acquisition; and basic concept of sensor interfacing with microcontrollers.

UNIT-V

Actuators and Applications:
Introduction to actuators and their working principles; Classification of actuators; Electrical actuators: DC motor, stepper motor, and servo motor (working principles and basic characteristics); Basic concepts of hydraulic and pneumatic actuators; Relay and switching devices; Actuator control (open-loop and closed-loop concept); Integration of sensors and actuators; Applications in automation systems, robotics, and IoT.

Text Books:

1. Handbook of Modern Sensors: Physics, Designs, and Applications, Jacob Fraden, Spring 4th Edition, ISBN: 978-1441964656.
2. Sensors and Transducers, D. Patranabis, PHI Learning Pvt. Ltd., 2nd Edition, ISBN: 978 8120326941.

Reference Books:

1. Principles of Measurement Systems, John P. Bentley, Pearson Education, 4th Edition, ISBN: 978-0130430281.
2. Electronic Instrumentation, H.S. Kalsi, McGraw-Hill Education, 3rd Edition, ISBN: 978-0070702066.
3. Measurement Systems: Application and Design, Ernest O. Doebelin and Dhanesh N. Manik, McGraw-Hill, 5th Edition, ISBN: 978-0072426328.

Web Links:

1. https://nptel.ac.in/courses/108105064
2. https://nptel.ac.in/courses/108106165
3. https://www.youtube.com/watch?v=nE1C4ghfvac&list=PLgMDNELGJ1CbufZjqWa8uoSlQWKqVwPN7

EMBEDDED C

	L	T	P	C
Course Code: 2501EC40	**2**	**0**	**1**	**3**

Course Outcomes:

At the end of the course, student will be able to:

CO1: Explain embedded system concepts and 8051 architecture
CO2: Apply Embedded C programming for interfacing peripherals
CO3: Analyze real-time systems using timers, interrupts, and delays.
CO4: Develop multi-state embedded systems using timed and input-based state machines.
CO5: Develop complete embedded system applications by integrating peripherals

Mapping of Course Outcomes with Program Outcomes:

CO/PO	PO 1	PO 2	PO 3	PO 4	PO 5	PO 6	PO 7	PO 8	PO 9	PO 10	PO 11
CO1	3	2									
CO2	3	3	2		3						
CO3	3	3	2	3	2						
CO4	3	3	3	2	3						
CO5	3	3	3	3	3						

Mapping of Course Outcomes with Program Specific Outcomes:

CO/PSO	PSO1	PSO2
CO1		2
CO2		2
CO3		2
CO4		2
CO5		2

UNIT – I

Introduction:

Introduction to embedded systems, Processor suitable for embedded system, Selection of programming language, Operating system, Development of embedded software. Introduction to microcontroller family, External interface of the Standard 8051, Reset requirements, Clock frequency and performance, Memory issues, I/O pins, Timers, Interrupts Serial interface Power consumption.

UNIT – II

Introduction to Reading switches:

Basic techniques for reading from port pins, Example: Reading ,writing bytes and Bits, The need for pull-up resistors, dealing with switch bounce with an example.

Adding Structure to the Code:

Introduction to adding structure to your code, Object-oriented programming with C, The Project Header (MAIN.H), The Port Header (PORT.H), Example: Restructuring the 'Hello Embedded World', Example: Restructuring the goat-counting, Further examples.

Practice:

1. Write an Embedded C Program to interface the switch with a microcontroller in Proteus to control an LED using I/O Ports.
2. Write an Embedded C Program to interface a 16×2 LCD with a microcontroller and display messages.

UNIT – III

Meeting real-time constraints: Introduction, creating 'hardware delays' using Timer 0 and Timer 1, Example: Generating a precise 50ms delay, creating a portable hardware delay, Need for Timeout Machanism,Creating loop Timeouts with Examples,Creating hardware Timeouts with Examples .

Practice:

1. Write an Embedded C Program to Interface stepper motor be controlled (CW/CCW rotation and speed control) using a microcontroller and Proteus simulation.
2. Write an Embedded C Program for timer interrupts and external interrupts in a microcontroller demonstrate them through Proteus

UNIT – IV

Introduction to multi-state systems and function sequences, Implementing a Multi-State (Timed) system, Example: Traffic light sequencing, Example: Animatronic dinosaur, Implementing a Multi-State (Input/Timed) system, Example: Controller for a washing machine.

Practice:

1. Write an Embedded C Program to design a traffic light sequencing system using Embedded C.

UNIT – V

Case study:

Intruder alarm system, Software architecture of Intruder alarm system, Key software components used in Intruder alarm system, Intruder alarm system program using Embedded C.

Practice:

1. Develop an Application to interface a 4×4 keypad with a microcontroller and display the key pressed using LCD or serial terminal in Proteus?
2. Design and simulate a complete embedded system application in Proteus using Embedded C (e.g., password door lock, digital clock, sensor system, etc.)

Text Books:

1. Embedded C - Michael J. Pont, 2nd Ed., Pearson Education, 2008.
2. An Embedded Software Primer, David. E. Simon, Pearson Education, 2001.
3. Embedded Software Development with C, Kai Qian, David Den Haring, Li Cao (auth.), Springer US, 2009.

Reference Books:

1. Embedded Microcomputer Systems,Jonathan W. Valvano, Brooks / Cole,Thompson Learning.
2. Fundamentals of Embedded Software where C and Assembly meet,Daniel W.Lewis,PHI, 2002.
3. Embedded System Design,Frank Vahid and Tony Gwargie, John Wiley & sons,2002.

Web Links:

1. https://nptel.ac.in/courses/106/105/106105193/ Prof. Indranil Sen Gupta, IIT,Kharagpur (NPTEL course)
2. https://onlinecourses.nptel.ac.in/noc20_ee98/preview Prof. Dhananjay V. Gadre, Prof. BadriSubudhi | Netaji Subhas University of Technology, IIT Jammu
3. http://www.ecpe.nu.ac.th/ponpisut/22323006-Embedded-c-Tutorial-8051.pdf

Hardware Interfacing & Networking

	L	T	P	C
Course Code: 2501EC36	**3**	**0**	**0**	**3**

Course Outcomes:

At the end of the course, student will be able to:

CO1: Explain the fundamentals of serial communication and UART-based protocols used in embedded systems.

CO2: Describe synchronous communication protocols such as SPI and I2C for peripheral interfacing in embedded applications.

CO3: Explain the architecture and communication mechanisms of industrial protocols including CAN, MODBUS, PROFIBUS, and LIN bus.

CO4: Describe Ethernet networking fundamentals, network hardware components, and Internet protocol concepts used in embedded networking.

CO5: Explain embedded Ethernet communication using TCP/IP, UDP, FTP, web-based communication, and network security concepts.

Mapping of Course Outcomes with Program Outcomes:

CO/PO	PO 1	PO 2	PO 3	PO 4	PO 5	PO 6	PO 7	PO 8	PO 9	PO 10	PO 11
CO1	3	2								1	
CO2	3	2								1	
CO3	2	3								1	
CO4	2	2								1	
CO5	2	2	2							1	

Mapping of Course Outcomes with Program Specific Outcomes:

CO/PSO	PSO1	PSO2
CO1		2
CO2		2
CO3		2
CO4		2
CO5		2

UNIT – I

Fundamental Serial Communication Protocols: Introduction to embedded communication, serial communication basics, RS-232 standard, RS-485 standard, MAX232, electrical characteristics and interfacing, UART protocol, asynchronous transmission, framing and baud rate.

UNIT – II

Synchronous Peripheral Communication Protocols:

Synchronous serial communication, SPI protocol, architecture and data transfer modes, timing characteristics, I2C protocol, addressing schemes, arbitration, clock synchronization and data transfer.

UNIT – III

Industrial communication Protocols:

USB bus-Introduction – Speed Identification on the bus – USB States – USB bus communication: Packets –Data flow types, **in**troduction to CAN, CAN architecture, signaling and bit timing, data frame format, arbitration mechanism, CAN bus operation. MODBUS protocol, message structure and communication, Profibus protocol, architecture and communication model, LIN bus protocol.

UNIT – IV

Ethernet Basics: Elements of a network – Inside Ethernet – Building a Network: Hardware options – Cables, Connections and network speed – Design choices: Selecting components –Ethernet Controllers –Using the internet in local and internet communications – Inside the Internet protocol.

UNIT – V

Embedded Ethernet: Exchanging messages using UDP and TCP – Serving web pages with Dynamic Data – Serving web pages that respond to user Input – Email for Embedded Systems – Using FTP – Keeping Devices and Network secure.

Text Books:

1. Embedded Systems Design: A Unified Hardware/Software Introduction - Frank Vahid, Tony Givargis, John & Wiley Publications, ISBN: 9788126508372.
2. Embedded networking with CAN and CAN open by Olaf Pfeiffer, Andrew Ayre and Christian Keydel, Copper hill Technologies Corporation, ISBN: 978-0976511625.
3. Embedded Ethernet and Internet Complete - Jan Axelson, Penram publications, ISBN: 978-1931448000.

Reference Books:

1. Modbus-IDA, MODBUS application protocol specification, Modbus-IDA,. Siemens, Profibus network manual, Siemens manual.
2. Profibus in practice: System Architecture and Design byXiu Ji, CRC press, ISBN: 978-1507633045.
3. Lin Application note AN1278 by SGS-Thompson, SGS - Thompson Ltd.

Web Links:

1. https://archive.nptel.ac.in/courses/108/102/108102045/.
2. https://archive.nptel.ac.in/courses/108/105/108105057/.

Microcontrollers for Embedded Systems

	L	T	P	C
Course Code: 2501EC38	**3**	**0**	**0**	**3**

Course Outcomes:

At the end of the course, student will be able to:

CO1: Explain the basic architecture and features of PIC microcontrollers.
CO2: Explain architecture and programming model of ARM 7TDMI.
CO3: Interpret the programmer's model of ARM cortex M3-processor.
CO4: Compare the various exceptions present in the processor.
CO5: Summarize the low power modes of MSP 430 micro controller.

Mapping of Course Outcomes with Program Outcomes:

CO/PO	PO 1	PO 2	PO 3	PO 4	PO 5	PO 6	PO 7	PO 8	PO 9	PO 10	PO 11
CO1	3	2									1
CO2	3	2									1
CO3	2	3	1	1							1
CO4	3	2									1
CO5	2	3									1

Mapping of Course Outcomes with Program Specific Outcomes:

CO/PSO	PSO1	PSO2
CO1		2
CO2		2
CO3		2
CO4		2
CO5		2

UNIT – I

Arduino Microcontroller (ATmega328P):
Introduction to Arduino Uno, Features and architecture overview, Pin configuration Programming Fundamentals, Digital and analog operations, Serial communication and debugging, Arduino Libraries & Code Reusability, logic-based LED pattern generation.

UNIT – II

PIC Microcontrollers:
PIC16F877 Architecture, Instructions Set, addressing modes, PIC16F877 **Peripherals:** Timers, CCP modules, ADC modules.

UNIT-III

MSP430 16 - BIT MICROCONTROLLER :

The MSP430 Architecture, CPU Registers, Instruction Set, addressing modes, the MSP430 family viz. MSP430x2x, MSP430x4x, MSP430x5x. Low power aspects of MSP430 : low power modes, active Vs standby current consumption, FRAM Vs Flash for low power and reliability.

UNIT- IV

ARM7 Microcontroller:

ARM7 microcontroller architecture, memory organization, description of functional units of microcontroller: ports, interrupts, on chip ADCs, DACs, serial peripheral interface, timers, programmable counter array.

UNIT-V

ARM Cortex-M3 processor:

Applications, Programming model– Registers, Operation modes, Instruction Set, Memory Maps, Exceptions and Interrupts, Reset Sequence, Memory Access Attributes, Permissions, Bit-Band Operations, Unaligned and Exclusive Transfers. Pipeline, Bus Interfaces.

Text Books:

1. Micro Controller theory and Application ,Ajay .V. Deshmukh, TATA McGraw –Hill, 1st Edition, ISBN: 9780070585959.
2. ARM System Developer's Guide: Design in and Optimizing, Sloss Andrew N, Symes Dominic, Wright Chris, Morgan Kaufman Publication,ISBN: 978-1-55860-874-0.

Reference Books:

1. ARM System-on-Chip Architecture, Steve furber, Addison-Wesley Educational Publishe Inc, 2nd Edition, ISBN: 9780201675191
2. PIC Microcontroller and Embedded Systems: Using Assembly and C for PIC18Muhamn Ali Mazidi, Rolin D. Mc Kinlay, Danny Causey, Pearson Prentice Hall, ISBN: 9780136009023.
3. MSP 430 Micro controller basics, John H. Davies, Elsevier, ISBN: 978-0-7506-8276-3.

Web Links:

1. http://nptel.ac.in/courses/117/106/117106086 .
2. https://onlinecourses.nptel.ac.in/noc20_ee42
3. https://nptel.ac.in/courses/117106111

Embedded Real Time Systems

	L	T	P	C
Course Code: 2501EC32	**3**	**0**	**0**	**3**

Course Outcomes:

At the end of the course, student will be able to:

CO1: Summarize the services and tasks in RTOS.
CO2: Infer interrupts and timer services for embedded applications.
CO3: Outline memory management in embedded systems.
CO4: Illustrate program modeling for case studies.
CO5: Identify Fundamental Issues in Hardware software co- design

Mapping of Course Outcomes with Program Outcomes:

CO/PO	PO 1	PO 2	PO 3	PO 4	PO 5	PO 6	PO 7	PO 8	PO 9	PO 10	PO 11
CO1	3	2									1
CO2	3	1									1
CO3	3	2									1
CO4	3	2									1
CO5		3									1

Mapping of Course Outcomes with Program Specific Outcomes:

CO/PSO	PSO1	PSO2
CO1		2
CO2		2
CO3		2
CO4		2
CO5		2

UNIT – I

Operating System Concepts: History of Operating Systems, Functions performed by an OS, Kernel, Tasks, Processes, Threads, Defining RTOS, The Scheduler, Objects, Services, Characteristics of RTOS, Defining a Task, Tasks States, Task Operations and Task Structure.

UNIT – II

Synchronization and Inter Process Communication:
Defining Semaphore, Typical Semaphore Operation, Typical Semaphore Uses, Defining Message Queue, Message Queue States, Typical Message Queue Operation, Typical Message Queue Use, Pipes, Event Registers, Signals, Condition variables.

UNIT – III

Exceptions, Interrupts and Timers:
Exceptions, Interrupts, Applications of Exceptions and Interrupts, Processing General Exceptions, Nature of Spurious Interrupts, Introduction to Timers, Programmable Interval Timers, Timer Interrupt Service Routines (ISR), Soft Timers, Operations.

UNIT – IV

Memory Management:
Dynamic Memory Allocation in Embedded Systems, Fixed-Size Memory management in Embedded Systems, Blocking VS. Non-Blocking Memory Functions, Hardware Memory Management Units.

UNIT – V

Case study and Example RTOS:
Linux POSIX system, MicroC/OS-II, Vx Works, QNX RTOS, Kernel Design Issues-process states, data structures, inter-task communication mechanism, Scheduling.

Text Books:

1. Embedded/Real-Time Systems Dr. K.V.K.K. Prasad,Dream Tech Publications, Blackpad book, ISBN: 978-8177224610.
2. Real Time Concepts for Embedded Systems – Qing Li, Caroline Yao, Taylor & Francis Group, CRC Press,ISBN: 9781482280821
3. Embedded Systems, An Integrated Approach, Lyla B.Das, Pearson Education, ISBN: 9789332511675

Reference Books:

1. Embedded Systems-Architecture, Programming and Design ,Rajkamal,Tata McGraw Hill Publications, Second Edition,ISBN: 978-0070667648.
2. Real-Time Systems: Scheduling, Analysis and Verific Cheng WileyInter science, ISBN: 9780471460848
3. Real-Time Systems: Design Principles for Distributed Embedded Applica Hermann Kopetz, Kluwer, ISBN: 9781441982377

Web Links:

1. http://www.nptelvideos.in/2012/11/embedded-systems.html
2. http://www.dauniv.ac.in/Embedded_Sys.php
3. https://sites.google.com/site/embeddedsystemddr/ppt

Wireless LANs & PANs

	L	T	P	C
Course Code: 2501EC42	**3**	**0**	**0**	**3**

Course Outcomes:

At the end of the course student will be able to:

CO1: Explain the fundamentals of computer networks, reference models, IoT concepts, communication models, and layered architecture.
CO2: Describe WLAN technologies based on IEEE 802.11 standards.
CO3: Illustrate the architecture, operation, and applications of short-range wireless communication technologies.
CO4: Illustrate the architecture, operation, and applications of long Range and w-power wireless communication Communication Technologies.
CO5: Discuss IoT communication protocols such as WirelessHART, Z-Wave, 6LoWPAN, CoAP, and MQTT for smart and industrial applications.

Mapping of Course Outcomes with Program Outcomes:

CO/PO	PO 1	PO 2	PO 3	PO 4	PO 5	PO 6	PO 7	PO 8	PO 9	PO 10	PO 11
CO1	3	2									1
CO2	3	2									1
CO3	3	3									1
CO4	3	3									1
CO5	3	2									1

Mapping of Course Outcomes with Program Specific Outcomes:

CO/PSO	PSO1	PSO2
CO1		2
CO2		2
CO3		2
CO4		2
CO5		2

UNIT – I

Computer Networks Basics: Basics of Computer Networks, Types of Networks: PAN, LAN, MAN, WAN, OSI Reference Model, TCP/IP Reference Model,

IoT Fundamentals: Introduction, Evolution of IOT, IOT and M2M, IoT communication models, Functionality of Layers in IoT.

UNIT – II

Random Access Protocols: Multiple access Techniques, random access protocols, Pure ALOHA, Slotted ALOHA, CSMA, CSMA/CD, CSMA/CA.

WLAN : Wireless LAN Introduction, WLAN Topologies: Infrastructure and Ad-hoc, Features of IEEE 802.11 Standards (a/b/g/n/ac/ax), Wi-Fi Architecture and Operation, Wired LAN vs Wireless LAN Comparison.

UNIT – III

Short Range Wireless Technologies (WPAN):

Bluetooth protocol, architecture and operation, Bluetooth Low Energy (BLE), IEEE 802.15.4 standard, low-rate WPAN communication principles, ZigBee protocol, architecture and network topologies, RFID communication principles, NFC Technology.

UNIT – IV

Long Range and Low-Power Wireless Communication Technologies:

LPWAN communication, LoRa and LoRaWAN architecture, end devices, gateways and network server, Sigfox Overview, NB-IoT Basics, LTE-M Technology, Introduction to 5G IoT Communication (mMTC, URLLC, eMBB).

UNIT – V

IoT Communication Protocols:

Architecture and Applications of IoT Communication protocols - Wireless HART, Z-Wave, 6LoWPAN, CoAP, MQTT.

Text Books:

1. Ad Hoc and Sensor Networks - Carlos de Morais Cordeiro and Dharma Prakash Agrawal, World Scientific, ISBN: 978-9814338882.
2. Wireless Communications and Networking - Vijay K.Garg, Morgan Kaufmann Publishers, ISBN: 978-0123735805.
3. Internet of Things by Raj Kamal, McGraw-Hill Education. Copyright.

Reference Books:

1. Principles of Wireless Networks - Kaveh Pahlaram, Prashant Krishnamurthy, PHI, ISBN:978-0130930033.
2. Guide to Wireless Communication- Marks Ciampor, Jeorge Olenewa, Cengage Learning, ISBN: 9781111307318.
3. Internet of Things (A Hands-on- Approach)‖ by Vijay Madisetti and ArshdeepBahga, 1 stEdition, VPT, 2014.

Web Links:

1. https://archive.nptel.ac.in/courses/106/105/106105183/
2. https://archive.nptel.ac.in/courses/108/108/108108179/
3. https://onlinecourses.nptel.ac.in/noc21_cs17/preview?msclkid=16aacd77c08211ec97fb643b5beb9cd2 Introduction to internet of things - Course (nptel.ac.in)
4. Design for internet of thingsBy Prof. Prabhakar T V | IISc Bangalore Design for internet of things - Course (nptel.ac.in)

System Programming

	L	T	P	C
Course Code: 2501EC39	**3**	**0**	**0**	**3**

Course Outcomes:

At the end of the course, student will be able to:

CO1: Apply the fundamental concepts of C programming and data structures to solve basic computational problems.

CO2: Apply knowledge of Linux basics in SHELL programming.

CO3: Analyze the components of embedded Linux systems to understand their roles and interactions.

CO4: Apply kernel module programming techniques to develop and test basic device driver programs.

CO5: Design and implement embedded and Linux-based development environments using state-of-the-art hardware and software tools.

Mapping of Course Outcomes with Program Outcomes:

CO/PO	PO 1	PO 2	PO 3	PO 4	PO 5	PO 6	PO 7	PO 8	PO 9	PO 10	PO 11
CO1	3	2	1								
CO2	2	2	1								
CO3	3	3	2								
CO4	3	3	2								
CO5	3	2	3								

Mapping of Course Outcomes with Program Specific Outcomes:

CO/PSO	PSO1	PSO2
CO1		2
CO2		2
CO3		2
CO4		2
CO5		2

UNIT – I

Programming Concepts with C and Data Structures:

Basic concepts of C, Embedded C Vs C, Embedded programming aspects with respect to firmware, Bitwise manipulation, Functions, Recursive Functions, Arrays, pointers, Function Pointers, File Handling, Preprocessor Directives, structures, Union, and Inputs/Outputs, static and dynamic memory allocation, Linked list, Single linked list, Double linked list and Queues.

UNIT – II

Linux Essentials with Shell Scripting Techniques

Command prompt, X windows basics, navigating file system, finding files, working with folders, reading files text editing in Linux, Compression and archiving tools, Basic shell commands, File Management, I/O Handling, File Locking. Processes, giving more than one command at a time, prioritizing and killing processes, Scheduling Commands, pipes and

redirection, regular expression, pattern matching, Scripting using for while, if and other commands.

UNIT – III
Embedded Linux Development Essentials:
Introduction to Embedded Linux - Linux Kernel Basics for Embedded Systems - Build Systems and Cross-Compilation - Root Filesystem Essentials - Device Drivers and Hardware Interfacing - Debugging Techniques.

UNIT – IV
Kernel Module Programming:
Compiling kernel, Configuring Kernel and compilation, Kernel code, browsers,Static linking, dynamic linking of modules, User space, kernel space concepts, writing simple modules – Writing, Make-files for modules.

UNIT – V
Device Driver concepts:
Driver concepts, Block & character driver distinction, Low level drivers, OS drivers etc, Writing character drivers – GPIO driver, Device major, minor number.

Text Books:

1. Neil Mathew, Richard stones, Beginning Linux Programming, 2012,4th Edition, Wrox – Wiley Publishing, USA.
2. Eric Foster Johnson, John C. Welch, Micah Anderson, Beginning shell scripting, 2012, 1st Edition, Wrox – Wiley Publishing, USA.

Reference Books:

1. Derek Molloy, Exploring Beagle Bone: Tools and Techniques for Building with Embedded Linux, 2015, 1st Edition, Wiley Publications, USA
2. Frank Vasquez, Profile IconChris Simmonds, Mastering Embedded Linux Programming, 2021, 3rd Edition, Packt Publishing, UK.

Web Links:

1. https://www.coursera.org/specializations/c-programming-linux#courses
2. https://www.coursera.org/learn/linux-system-programming-introduction-to-buildroot

Embedded System Design

	L	T	P	C
Course Code: 2501EC34	**3**	**0**	**0**	**3**

Course Outcomes:

At the end of the course, student will be able to:

CO1: Summarize the building blocks of an Embedded system.
CO2: Interpret the hardware modules required to design an Embedded system.
CO3: Infer the firmware design approaches for an Embedded system.
CO4: Discuss the functionalities of Real time Operating Systems.
CO5: Develop Embedded systems based on their applications.

Mapping of Course Outcomes with Program Outcomes:

CO/PO	PO 1	PO 2	PO 3	PO 4	PO 5	PO 6	PO 7	PO 8	PO 9	PO 10	PO 11
CO1	3	2						1	1		1
CO2	3	2	1	1				1	1		1
CO3	2	3						1	1		1
CO4	2	3						1	1		1
CO5	2	2	3	1				1	1		1

Mapping of Course Outcomes with Program Specific Outcomes:

CO/PSO	PSO1	PSO2
CO1		2
CO2		2
CO3		2
CO4		2
CO5		2

UNIT – I
Introduction:
Embedded System-Definition, History of embedded system, Characteristics of an embedded system, classification of embedded systems, Embedded System Architecture Quality attributes of embedded systems, Challenges in Embedded System Design, Examples of an embedded system.

UNIT – II
Designing Embedded Computing Platform:
Introduction to Processors & Controllers, Sensors, Actuators, Analog and digital electronic components, I/O types and examples, Memory Classification, Timer and counting devices, Watchdog Timers, RTC, Wireless Protocols.

UNIT – III
Embedded Firmware:

Embedded Firmware design approaches & development languages, Pre-processors, Interpreters, Compilers and Linkers, Debugging tools , C versus Embedded C, ALP Programming.

UNIT – IV

Real-Time Operating Systems:

Classification of OS, Tasks, Process and Threads, Multiprocessing and Multitasking, Task Scheduling, Threads, Processes and Scheduling, Task communication, Task synchronization. Application Programming on RTOS.

UNIT – V

Embedded System Development:

The IDE, Types of files generated on cross- compilation, Deassembler/ Decompile, Simulators, Emulators and Debugging, Target hardware debugging, Boundary Scan, Embedded Software development process and tools.

Text Books:

1. Embedded Systems, Shibu.K. V, Tata McGraw Hill Education Private Limited, ISBN: 978-9339219680.
2. Computers as Components – Principles of Embedded Computing System Design, Marilyn Wolf,Morgan Kaufmann Publisher (An imprint from Elsevier), 3rd Edition, ISBN: 0128053879.

Reference Books:

1. Embedded System Design, Frank Vahid and Tony Givargis, John Wiley Publications, ISBN: 9781222995374.
2. The Designer's Guide to the Cortex-M Processor Family - A Tutorial Approach, Trevor Martin, Elsevier Science, st Edition, ISBN: 9780080982991.

Web Links:

1. http://www.artistembedded.org/docs/Events/2006/ChinaSchool/1_ESIntroduction.pdf
2. http://web.cecs.pdx.edu/~mperkows/temp/hardware-software-codesign.pdf
3. http://www.vtt.fi/inf/pdf/publications/2004/P526.pdf

Real Time operating system using QNX

	L	T	P	C
Course Code: 2501EC41	**0**	**0**	**2**	**2**

Course Outcomes:

At the end of the course, student will be able to:

CO1: Describe the QNX OS architecture and its microkernel-based design.
CO2: Develop and debug QNX-based applications using appropriate tools.
CO3: Apply process/thread management and synchronization techniques in QNX.
CO4: Implement inter-process communication methods for real-time systems.
CO5: Configure and build QNX boot/OS images for specific hardware platforms.

Mapping of Course Outcomes with Program Outcomes:

CO/PO	PO 1	PO 2	PO 3	PO 4	PO 5	PO 6	PO 7	PO 8	PO 9	PO 10	PO 11
CO1	3	2			2						1
CO2	3	1			2						1
CO3	3	2			2						1
CO4	3	2			2						1
CO5		3			2						1

Mapping of Course Outcomes with Program Specific Outcomes:

CO/PSO	PSO1	PSO2
CO1		2
CO2		2
CO3		2
CO4		2
CO5		2

UNIT – I

Introduction to QNX OS Architecture:

Overview of QNX OS architecture: microkernel, process manager, and standards. Protected address spaces, process/thread model, and scheduling. Introduction to inter-process communication (IPC) and synchronization. Resource managers and shared objects.

Practice:

1. Introduction to QNX Software and installation
   - QNX SOFTWARE Centre
   - Momentics IDE
   - QNX800
   - VMware Workstation
2. Execution of a program-print “hello world” using IDE environment and VMware
3. Installing QNX image into Raspberry Pi board- Execution of a program-print “hello world”

UNIT – II

Processes, Threads, and Synchronization:

Process management: creation, termination, and memory protection. Thread management: creation, termination, and synchronization. Synchronization techniques: mutexes, semaphores, and condition variables.

Practice:

1. Multiple Child creation using fork, exec and spawn, detecting termination of a child
2. Multiple thread creation-Thread Synchronization-Thread join and Mutex.
3. Condition variable

UNIT – III

Inter-Process Communication (IPC):

Overview of IPC methods in QNX: message passing, pulses, and shared memory. Comparing IPC methods: advantages and disadvantages.

Practice:

1. IPC-Client Server-Message passing.
2. IPC-Pulse and Name-attach and Name-open
3. IPC-IOV & Pulses events

UNIT – IV

Hardware Programming and Timing:

Hardware access methods: IO-mapped and memory-mapped IO. Interrupt handling and DMA-safe memory allocation. Timing architecture: periodic timing, one-shot timing, and timeouts.

Practice:

1. Simple interrupt handling
2. Implement two processes that communicate via shared memory using shm_open and mmap. One process writes data, and the other reads and displays it.

UNIT – V

Building and Configuring QNX Boot/OS Images:

Overview of QNX boot/OS image structure. Components of a boot image: startup code, kernel, drivers, and scripts. Building and loading boot images onto target hardware. Introduction to resource managers and their implementation.

Practice:

1. BSP Booting
2. Create a new virtual machine image with a larger boot disk.

Web Links:

1. https://blackberry .qnx.com/en/products/qnx-everywhere
2. https://gitlab.com/qnx
3. https://www.reddit.com/r/QNX/
4. https://stackoverflow.com/questions/tagged/qnx
5. https://www.youtube.com/qnxcam

Machine Learning for Embedded System

	L	T	P	C
Course Code: 2501EC33	**3**	**0**	**0**	**3**

Course Outcomes:

At the end of the course, student will be able to:

CO1: Understand ML fundamentals and TinyML concepts.
CO2: Apply neural network training and optimization techniques.
CO3: Apply ML algorithms for embedded applications.
CO4: Discuss deep learning architectures for embedded systems.
CO5: Apply deployment frameworks for real-world embedded AI applications.

Mapping of Course Outcomes with Program Outcomes:

CO/PO	PO 1	PO 2	PO 3	PO 4	PO 5	PO 6	PO 7	PO 8	PO 9	PO 10	PO 11
CO1	3	2								1	
CO2	3	3	2							1	
CO3	2	3	2							1	
CO4	2	2	3							1	
CO5	2	2	3							1	

Mapping of Course Outcomes with Program Specific Outcomes:

CO/PSO	PSO1	PSO2
CO1		2
CO2		2
CO3		2
CO4		2
CO5		2

UNIT – I
Foundations of Machine Learning in Embedded System:

Various paradigms of learning problems, Forms of Learning: Supervised, and Unsupervised algorithms, Reinforcement Learning, Machine Learning Terminologies and Model Evaluation: Confusion Matrix, Accuracy, Precision, Recall, F1-Score, training, testing, validation, cross-validation, overfitting, underfitting, early stopping, regularization, bias and variance, Introduction to TinyML and Edge AI.

UNIT – II
Neural Networks and Model Training:

Differences between Biological and Artificial Neural Networks - General Architecture, Multi-layer neural network, Linear Separability, Perceptron, Adaline, Standard Back propagation, Training Algorithms for Pattern Association - Hebb rule and Delta rule, Gradient descent, Boltzmann Machine Learning, Model training vs inference on embedded systems, Lightweight Neural Network deployment strategies -quantization, and pruning.

UNIT – III
Advanced Machine Learning Techniques:

Feature Engineering, Dimensionality Reduction, Classifiers: K-Nearest Neighbour (KNN), Support Vector Machine (SVM), Decision Trees, Naïve Bayes, Binary Classification, Multi-class Classification, Clustering, Ensemble learning, Low-power classification methods for Embedded controllers.

UNIT – IV
Deep Learning Architectures:

Convolutional Neural Networks: Convolution layers, Pooling layers, Fully connected layers, Advanced CNN models: Alexnet, VGGnet, ResNet, Handling overfitting in CNN: drop out, transfer learning, data augmentation, Recurrent Neural Networks, Structure of RNN Cell, LSTM and GRU, Autoencoders: Convolutional Autoencoders, Denoising Autoencoders, Variational Autoencoders, Lightweight DL architectures for embedded systems: Squeeze Net, MobileNetV3, and Tiny-YOLO.

UNIT – V
Generative Models, Deployment and Real-World Applications:

Generative Adversarial Networks (GANs): The Discriminator, Generator, Introduction to BERT Transformer, Real-world applications in NLP, Computer Vision, Healthcare, and Finance, Deployment frameworks: TensorFlow Lite, PyTorch Mobile.

Text Books:

1. ShaiShalev-Shwartz and Shai Ben-David, Understanding Machine Learning, 2017,1st Edition, Cambridge University Press., ISBN: 978-1107057135.
2. Ian Good fellow, Yoshua Bengio and Aaron Courville, Deep Learning, 2016, MIT Press, ISBN: 9780262035613.

Reference Books:

1. J. S. R. Jang, C. T. Sun, E. Mizutani, Neuro Fuzzy and Soft Computing - A Computational Approach to Learning and Machine Intelligence, 2012,1st Edition, PHI learning.ISBN: 9780132610667.
2. Trevor Hastie, Robert Tibshirani and Jerome Friedman, The Elements of Statistical Learning, 2009,2nd Edition, Springer Series. ISBN: 9780387848846.
3. Christopher M. Bishop, Pattern Recognition and Machine Learning, 2016, Springer, ISBN: 978-0-387-31073-2.

Web Links:

1. https://onlinecourses.nptel.ac.in/e-learning/preview/noc26_ee53
2. https://onlinecourses.nptel.ac.in/e-learning/preview/noc26_cs74

Hardware & Software Co-Design

	L	T	P	C
Course Code:2501EC35	**3**	**0**	**0**	**3**

Course Outcomes:

At the end of the course, student will be able to:

CO1: Analyze embedded system's hardware and software design issues.
CO2: Develop the applications on 8051, ADSP2106 and TMS320C60 processors.
CO3: Explain modern embedded architectures and compilation technologies.
CO4: Interpret the Design, co design by using design verification tools.
CO5: Develop a system from system level specification languages.

Mapping of Course Outcomes with Program Outcomes:

CO/PO	PO 1	PO 2	PO 3	PO 4	PO 5	PO 6	PO 7	PO 8	PO 9	PO 10	PO 11
CO1	2	3									
CO2	2	2	2								
CO3	3										
CO4	3	1									
CO5	2	2	1								

Mapping of Course Outcomes with Program Specific Outcomes:

CO/PSO	PSO1	PSO2
CO1		2
CO2		2
CO3		2
CO4		2
CO5		2

UNIT – I

Co- Design Issues: Co- Design Models, Architectures, Languages, A Generic Co-design Methodology.

Co-Synthesis Algorithms: Hardware software synthesis algorithms, hardware, software partitioning distributed system co synthesis.

UNIT – II

Prototyping and Emulation: Prototyping and emulation techniques, prototyping and emulation environments.

Target Architectures: Architecture Specialization techniques, System Communication infrastructure, Architecture for control dominated systems (8051-Architectures), Architecture for Data dominated systems (ADSP21060).

UNIT – III

Compilation Techniques and Tools for Embedded Processor Architectures: Modern embedded architectures(MMDSP Processor), embedded software development needs, compilation technologies.

UNIT – IV

Design Specification and Verification: Design,co-design, the co-design computational model, concurrency coordinating concurrent computations, interfacing components, design verification, implementation verification, verification tools, interface verification.

UNIT – V

Languages for System – Level Specification and Design-I: System – level specification, design representation for system level synthesis, system level specification languages. Languages for System-Level Specification and Design-II: Heterogeneous specifications and multi-language co-simulation.

Text Books:

1. Hardware / Software Co- Design Principles and Practice, Jorgen Staunstrup,Wayne Wolf, Springer, ISBN: 978-1441950185.
2. Hardware / Software Co- Design, Giovanni DeMicheli, Mariagiovanna Sami,Kluwer Academic Publishers, ISBN: 978-0792338833.

Reference Books:

1. A Practical Introduction to Hardware/Software Co-design, Patrick R.Schaumont, Springer Publications, ISBN: 978-1441959997.

Web Links:

1. https://embedded.eecs.berkeley.edu/Research/hsc/abstract.html
2. http://ieeexplore.ieee.org/document/6172642/
3. http://www.tik.ee.ethz.ch/education/lectures/hswcd/
4. http://ieeexplore.ieee.org/document/715400/

Minor Stream: Signal Processing and Communication Technology

Course Code	Course Name	Level	L	T	P	C	CIE	SEE	Total	Pre-requisite
2501EC45	Fundamentals of Speech Processing	IC	2		1	3	50	50	100	S&S
2501EC46	Information Theory & Coding Techniques	IC	2		1	3	50	50	100	-
2501EC44	Digital Signal Processors & Architectures	IC	2	1		3	50	50	100	DSP
2501EC43	Digital Image Processing	IC	2		1	3	50	50	100	S&S
2501EC49	Radar Engineering	IC	3			3	50	50	100	ADCM
2501EC51	Soft Computing Techniques	AC	2	1		3	50	50	100	-
2501EC47	Optical Communications	AC	3			3	50	50	100	ADCM
2501EC50	Satellite Communications	AC	3			3	50	50	100	ADCM
2501EC48	Pattern Recognition	AC	2			2	50	50	100	DIP
2501EC52	Wireless Communications	AC	2	1		3	50	50	100	ADCM
2501EC53	Wireless Sensor Networks	AC	3			3	50	50	100	IOT
Total			**29**		**3**	**32**				

Fundamentals of Speech Processing

	L	T	P	C
Course Code:2501EC45	**2**	**0**	**1**	**3**

Course Outcomes:

At the end of the course, student will be able to:

CO1: Interpret the basic concepts of speech production and perception.
CO2: Classify the concepts of analysis and processing of speech signals .
CO3: Analyze the enhancement of speech signals in the presence of different background noises.
CO4: Interpret the concepts pattern recognition system and different statistical modeling approaches.
CO5: Analyze the applications of speech processing including speaker recognition and speech recognition.

Mapping of Course Outcomes with Program Outcomes:

CO/PO	PO 1	PO 2	PO 3	PO 4	PO 5	PO 6	PO 7	PO 8	PO 9	PO 10	PO 11
CO1	2	1	3	-	1	-	-	1	1	-	1
CO2	2	3	-	-	1	-	-	1	1	-	1
CO3	2	3	2	-	1	-	-	1	1	-	1
CO4	2	3	2	-	1	-	-	1	1	-	1
CO5	2	2	3	-	1	-	-	1	1	-	1

Mapping of Course Outcomes with Program Specific Outcomes:

CO/PSO	PSO1	PSO2
CO1	2	-
CO2	2	-
CO3	2	-
CO4	2	-
CO5	2	-

UNIT – I

Introduction to Speech Processing:

Speech Fundamentals, Speech production and perception, information sources in speech signal, linguistic aspect of speech, acoustic and articulatory phonetics, nature of speech, models for speech analysis and perception, short-term processing of speech, time, frequency and time-frequency analysis, development of short-term Fourier transform (STFT), transform and filter-bank views of STFT.

Practice:

1. Manual speech signal-to-symbol transformation for speech signal.
2. Time-varying nature of the speech signal in the time domain as well as frequency domain.

UNIT – II

Speech Analysis:

Basis and development cesptrum analysis of speech, real and complex cepstrum, pitch detection, formant estimation, Mel-frequency cepstral coefficient (MFCC), delta and delta-delta MFCC, Linear Prediction (LP) analysis, LP analysis of speech, solution of LP equation using Levinson-Durbin's method, normalized error, LP spectrum, LP cepstrum, LP residual.

Practice:

1. Analyze speech signals by computing the cepstrum for various voiced and unvoiced sounds.
2. Analyze the characteristics of speech using linear prediction (LP) analysis.

UNIT – III

Speech enhancement:

objective, issues, enhancement of noisy speech, reverberant speech and multi-speaker speech using time, frequency and time-frequency approaches.

Practice:

1. Spectrographic Analysis of voiced, unvoiced and plosive Speech.
2. Short-time spectrum analysis of speech signals, the effect of size of the analysiswindow (less than one pitch period, one pitch period, two to four pitch periods).

UNIT – IV

Basic concepts of pattern recognition:

Feature extraction, modeling, testing, Objective, issues, block diagram description of automatic speech recognition (ASR) system, development of ASR system using vector quantization (VQ), dynamic time warping (DTW), Hidden Markov Model (HMM) and Neural networks (NN).

Practice:

1. Analyze speech signals by computing the cepstrum for various voiced and unvoiced sounds.
2. Analyze effects of sampling (aliasing) and quantization on speech signals byplaying them at different sampling rates and bits per sample.

UNIT – V

Speech Recognition:

Objective, issues, block diagram description of speaker recognition system, classification of speaker recognition systems, development of speaker recognition system using VQ, Gaussian mixture model (GMM), Adapted-GMM and I-vector.

Practice:

1. Speaker voice activity detection in speech.
2. Reconstruct the spectrum of various components (source, system) using the spectrum.

Text Books:

1. Digital Processing of Speech Signals, L.R. Rabiner and R.W. Schafer, Pearson Education, Delhi, India, ISBN: 978813170513.
2. Fundamentals of speech recognition, L. R. Rabiner, B. H. Jhuang and B. Yegnanarayana, Pearson Education, ISBN: 8177585606.

Reference Books:

1. Discrete-Time Processing of Speech Signals, J. R. Deller, Jr., J. H. L. Hansen and J. G. Proakis, Wiley-IEEE Press, NY, USA, ISBN: 0780353862.
2. Discrete time processing of speech signals, T. F. Quatieri, Pearson Education, ISBN: 013242942X.
3. Speech and Audio Processing, Dr.Shaila D.Apte -, First Edition, WILEY, ISBN: 978-8126534081.
4. Statistical Methods of Speech Recognition, Frederick Jelinek, MIT Press, 2022, ISBN: 9780262546607.

Web Links:

1. https://archive.nptel.ac.in/courses/117/105/117105145/#/ Prof. S.K. Das Mandal
2. https://www.cse.iitb.ac.in/~pjyothi/cs753/index.html/ Prof. Preethi Jyothi
3. https://ssp-iiith.vlabs.ac.in/Introduction.html/ Speech Signal Processing Lab
4. https://vlab.amrita.edu/index.php?sub=59&brch=164/ Speech Signal Processing Lab

Information Theory & Coding Techniques

	L	T	P	C
Course Code:2501EC46	**2**	**0**	**1**	**3**

Course Outcomes:

At the end of the course, student will be able to:

CO1: Explain the basics of Information theory.
CO2: Implement the various types of source coding algorithms and analyze their performance.
CO3: Design a channel coding scheme for a communication system.
CO4: Discuss the different types of entropy and coding theorem for Gaussian channels.
CO5: Evaluate the performance of coding techniques and error corrections.

Mapping of Course Outcomes with Program Outcomes:

CO/PO	PO 1	PO 2	PO 3	PO 4	PO 5	PO 6	PO 7	PO 8	PO 9	PO 10	PO 11
CO1	3	2	1	-	-	-	1	2	1	-	1
CO2	3	3	1	-	-	-	1	2	1	-	1
CO3	3	3	2	-	-	-	1	2	1	-	1
CO4	2	3	2	-	-	-	1	2	1	-	1
CO5	2	3	2	-	-	-	1	2	1	-	1

Mapping of Course Outcomes with Program Specific Outcomes:

CO/PSO	PSO1	PSO2
CO1	2	-
CO2	2	-
CO3	2	-
CO4	2	-
CO5	2	-

UNIT – I

Information Theory:

Entropy, Joint Entropy and Conditional Entropy, Relative Entropy and Mutual Information, Chain Rules, Data-Processing Inequality, Fano's Inequality.

Practice:

1. Write a program using matlab for the determination of various entropies and mutual information of a given channel. Test various types of channel such as
   a)Noise free channel b)Error free channel c) Binary symmetric channel
   d) Noisy channel

UNIT – II

Source Coding:

Shannon –Fano Coding,Optimality of Huffman Coding, Capacity of a Gaussian channel, bandwidth –S/N trade off, Capacity of discrete channels, Related Problems.

Practice:

1. Minimize coding redundancy using Source Encoder and Decoder using hardware kit.
2. Analyze the channel coding techniques in time and frequency domain using hardware kit.
3. Write a program for generation and evaluation of variable length source coding using matlab.
   a)Shannon –Fano coding and decoding.
4. Write a program for generation and evaluation of variable length source codingusing matlab.
   a)Huffman coding and decoding.

UNIT – III

Linear Block Codes:

Introduction, Matrix description of Linear Block Codes, Error detection and error correction capabilities of Linear block codes, Hamming codes, Binary Cyclic Codes, Algebraic structure, Encoding, Syndrome calculation, BCH Codes.

Practice:

1. Perform error detection and correction using Linear Block Code-Encoder andDecoder using hardware kit.
2. Write a program for encoding and decoding of BCH codes using matlab.

UNIT – IV

Cyclic Codes:

Description, Generator and Parity-check Matrices, Encoding, Syndrome Computation and Error Detection, Decoding, Cyclic Hamming Codes, Error-trapping decoding for cyclic codes, Majority logic decoding for cyclic codes, shortened cyclic codes.

Practice:

1. Perform error detection and correction using Binary Cyclic Code – Encoderand Decoder using hardware kit.

UNIT – V

Convolutional Codes:

Encoding of Convolutional Codes- Structural and Distance Properties, state, tree, trellis diagrams, maximum likelihood decoding, Sequential decoding, Majority- logic decoding of Convolution codes. Application of Viterbi Decoding and Sequential Decoding, Applications of Convolutional codes in ARQ system. Low Density Parity Check (LDPC) codes.

Practice:

1. Perform error detection and correction using Convolution Code – Encoder and Decoder using hardware kit.
2. Implementation of ARQ technique using matlab.

Text Books:

1. Information theory and coding - K. N. Hari Bhat , D. Ganesh Rao ,Cengage India Private Limited, First Edition,ISBN: 978-9386650924.
2. Information theory and coding by Anoop Singh poonia,Rupal Bansal,Ashirwad publisher,Fifth Edition,ISBN: 8190571109.

Reference Books:

1. Digital and Analog Communication Systemsby K.Sam Shanmugam,Wiley India Pvt Ltd, 1st Edition,ISBN: 8126509147.
2. Information Theory and Coding (Wiley India: 2015) by Dr. Muralidhar Kulkarni Dr. Shivaprakash K S,Wiley, 2nd Edition,ISBN: 9788126553051.

Web Links:

1. https://archive.nptel.ac.in/courses/108/102/108102117/
2. https://archive.nptel.ac.in/noc/courses/noc18/SEM2/noc18-ee39/

Digital Signal Processors & Architectures

	L	T	P	C
Course Code:2501EC44	**2**	**1**	**0**	**3**

Course Outcomes:

At the end of the course, student will be able to:

CO1: Summarize the concepts of number formats and various DSP related errors.
CO2: Illustrate the architectural features of Programmable digital signal processors.
CO3: Infer the TMS320C54XX processor architecture details, addressing modes and on-Chip peripherals.
CO4: Implement the basic DSP algorithms using digital signal processors.
CO5: Interpret the interfacing of devices with digital signal processors.

Mapping of Course Outcomes with Program Outcomes:

CO/PO	PO 1	PO 2	PO 3	PO 4	PO 5	PO 6	PO 7	PO 8	PO 9	PO 10	PO 11
CO1	3	2	-	-	-	-	-	-	-	-	1
CO2	3	1	-	-	-	-	-	-	-	-	1
CO3	2	3	1	-	-	-	-	-	-	-	1
CO4	2	3	2	-	-	-	-	-	-	-	1
CO5	2	3	-	-	-	-	-	-	-	-	1

Mapping of Course Outcomes with Program Specific Outcomes:

CO/PSO	PSO1	PSO2
CO1	2	-
CO2	2	-
CO3	2	-
CO4	2	-
CO5	2	-

UNIT – I
Computational Accuracy in DSP implementations:
Review of Digital signal processing, Number formats for signals and coefficients in DSP systems, Dynamic Range and Precision, Sources of error in DSP implementations, A/D Conversion errors, DSP Computational errors, D/A Conversion Errors

UNIT – II
Architectures for Programmable DSP Devices:
Basic Architectural features, DSP Computational Building Blocks, Bus Architecture and Memory, Data Addressing Capabilities, Address Generation Unit, Programmability and Program Execution, Speed Issues, Features for External interfacing

UNIT – III

Programmable Digital Signal Processors:

Commercial Digital signal-processing Devices, Data Addressing modes of TMS320C54XX Processors, Memory space of TMS320C54XX Processors, Program Control, TMS320C54XX Instructions and Programming, On Chip Peripherals, Interrupts of TMS320C54XX Processors, Pipeline Operation of TMS320C54XX Processors. Architectural features of TMS320C67XX Processors.

UNIT – IV

Implementations of basic DSP algorithms:

The Q-notation, FIR Filters, IIR Filters, Interpolation Filters, Decimation Filters, PID Controller, Adaptive Filters, An FFT Algorithm for DFT Computation, A Butterfly Computation, Overflow and scaling, Bit-Reversed index generation, An 8-Point FFT implementation on the TMS320C54XX, Computation of the signal spectrum.

UNIT – V

Interfacing Memory and I/O Peripherals to Programmable DSP Devices:

Memory space organization, External bus interfacing signals, Memory interface, Parallel I/O interface, Programmed I/O, Interrupts, Direct memory access (DMA).

Text Books:

1. Digital Signal Processing, Avtar Singh and S. Srinivasan, Thomson Press,ISBN: 9788131500347.
2. Digital Signal Processing: Principles, Algorithms & Applications – J.G. Proakis & D.G. Manolakis, PHI, 4th Edition,ISBN: 9788131710005..

Reference Books:

1. A Practical Approach to Digital Signal Processing, K Padmanabhan, R.Vijayarajeswaran, and Ananthi S, New Age International, 2nd Edition,ISBN: 978-8122432428.
2. Embedded Signal Processing with the Micro Signal Architecture, Woon-SengGan, and Sen M. Kuo, Wiley-IEEE Press, 1st Edition,ISBN. 978-0471738411.
3. DSP Processor Fundamentals, Architectures & Features, Lapsley et al, S. Chand &Co, 1st Edition,ISBN: 978-8126523542.

Web Links:

1. https://nptel.ac.in/courses/108/101/108101174 NPTEL course on "Digital Signal Processing and its Applications".
2. https://nptel.ac.in/courses/108106149NPTEL course on "Mapping Signal Processing Algorithms to Architectures".
3. https://www.analog.com/en/design-center/landing-pages/001/beginners-guide-to-dsp.html
4. https://www.dspguide.com/ch28/3.html

Digital Image Processing

	L	T	P	C
Course Code:2501EC43	**2**	**0**	**1**	**3**

Course Outcomes:

At the end of the course, student will be able to:

CO1: Interpret the concepts of digital image processing and image transforms.
CO2: Apply spatial and frequency domain techniques for image enhancement and Restoration.
CO3: Apply discontinuity and similarity based techniques for image segmentation.
CO4: Perform compression techniques for images.
CO5: Utilize color models for image processing applications.

Mapping of Course Outcomes with Program Outcomes:

CO/PO	PO 1	PO 2	PO 3	PO 4	PO 5	PO 6	PO 7	PO 8	PO 9	PO 10	PO 11
CO1	3	2	1	1	1	-	-	1	1	-	1
CO2	3	2	2	1	1	-	-	1	1	-	1
CO3	3	2	2	1	1	-	-	1	1	-	1
CO4	3	2	2	1	1	-	-	1	1	-	1
CO5	3	2	2	1	1	-	-	1	1	-	1

Mapping of Course Outcomes with Program Specific Outcomes:

CO/PSO	PSO1	PSO2
CO1	2	-
CO2	2	-
CO3	2	-
CO4	2	-
CO5	2	-

UNIT – I

Introduction: Introduction to Image Processing, Fundamental steps in digital image processing, Components of an image processing system, Image sensing and acquisition, Image sampling and quantization, Some basic relationships between pixels, An introduction to the mathematical tools used in digital image processing.

Image Transforms: Need for image transforms, Discrete Fourier transform (DFT) of one variable, Extension to functions of two variables, some properties of the 2-D Discrete Fourier transform, Importance of Phase, DCT, DST, Walsh-Hadamard transform, KLT, Haar transform, Radon Transform

Practice:

1. Compute arithmetic and logical operations on images
2. Compute DFT, DCT and DST of an image also calculate phase

UNIT – II

Image Enhancement: Back ground, basic intensity transformation methods, histogram processing, fundamentals of spatial filtering, smoothing and sharpening spatial filters, Combining spatial enhancement methods. The basics of filtering in the frequency domain, image smoothing and sharpening using frequency domain filters, selective filtering.

Practice:

1. Obtain the enhancement of a low contrast image using histogram equalization
2. Perform unsharp masking and high boost filtering to sharpen the image.

UNIT – III

Image Restoration and Reconstruction: A model of the image degradation/ Restoration process, Noise models, restoration in the presence of noise only- Spatial Filtering, Periodic Noise Reduction by frequency domain filtering, Linear, Position –Invariant Degradations, Estimating the degradation function, Inverse filtering, Minimum mean square error (Wiener) filtering, constrained least squares filtering, geometric mean filter.

Practice:

1. Compute the denoised image using mean filters for the removal of noise and compare the results in terms of PSNR.
2. Compute the denoised image using order-statistics filters for the removal noise and compare the results in terms of PSNR.
3. Perform deblurring using inverse filter and Wiener filter.

UNIT – IV

Image Segmentation: Fundamentals, point, line, edge detection, thresholding, region – based segmentation, Hough Transform.

Image Compression: Fundamentals, Basic compression methods: Huffman coding, Golomb coding, Arithmetic coding, LZW coding, Run-Length coding, Symbol-Based coding, Bit-Plane coding, Block Transform coding, Predictive coding.

Practice:

1. Compute the edge of an image using Sobel and Prewitt operator.
2. Compress image using Huffman coding and Arithmetic coding techniques

UNIT – V

Color Image Processing: Color fundamentals, color models, pseudo color image processing, basics of full color image processing, color transformations, smoothing and sharpening. Image segmentation based on color, noise in color images.

Morphological Image Processing: Dilation, Erosion, Opening, Closing.

Practice:

1. Compute smoothing on color images with and without noise
2. Compute sharpening on color images

Text Books:

1. Digital Image Processing, R. C. Gonzalez and R. E. Woods, Prentice Hall, 4th Edition, 2018,ISBN: 978-9353062989
2. Digital Image Processing, Jayaraman, S.Esakkiraja and T.Veerakumar, Tata McGrawHill Education, 2ndEdition, ISBN: 9780070144798

Reference Books:

1. Fundamentals of Digital Image Processing, Anil K. Jain, Prentice Hall of India, 9th Edition,ISBN: 978-9332551916.
2. Digital Image Processing, S Sridhar, Oxford higher Eeducation Publication, 2nd Edition,ISBN. . 978-0199459353.
3. Digital Image Processing using MATLAB, R. C. Gonzalez and R. E. Woods, Prentice Hall, 3rdEdition, ISBN: 978-0131687288.

Web Links:

1. http://nptel.ac.in/courses/117105079/(Digital Image Processing, IIT Kharagpur Prof. P.K. Biswas)
2. https://www.coursera.org/learn/digital#ratings(Fundamentals of digital image and video processing, Aggelos K. Katsaggelos, University of North westren)
3. https://sisu.ut.ee/imageprocessing/avaleht

RADAR Engineering

	L	T	P	C
Course Code:2501EC49	**3**	**0**	**0**	**3**

Course Outcomes:

At the end of the course, student will be able to:

CO1: Model the RADAR range equation.
CO2: Outline the working principle of CW and FM-CW RADARs.
CO3: Illustrate the principle of MTI RADAR and its characteristics.
CO4: Infer the RADAR tracking techniques.
CO5: Analyze matched filter receiver characteristics and subsystems of RADAR receiver.

Mapping of Course Outcomes with Program Outcomes:

CO/PO	PO 1	PO 2	PO 3	PO 4	PO 5	PO 6	PO 7	PO 8	PO 9	PO 10	PO 11
CO1	3	2	-	-	-	-	-	-	-	-	1
CO2	2	3	-	-	-	-	-	-	-	-	1
CO3	3	2	-	-	-	-	-	-	-	-	1
CO4	3	2	-	-	-	-	-	-	-	-	1
CO5	2	3	-	-	-	-	-	-	-	-	1

Mapping of Course Outcomes with Program Specific Outcomes:

CO/PSO	PSO1	PSO2
CO1	2	-
CO2	2	-
CO3	2	-
CO4	2	-
CO5	2	-

UNIT – I

Basics of Radar:

Introduction, nature of radar, Prediction of Range Performance, Minimum Detectable Signal, Receiver Noise, Illustrative Problems. Radar Equation: Modified Radar Range Equation, SNR, probability of detection, probability of False Alarm, Integration of Radar Pulses, Radar Cross Section of Targets (simple targets - sphere, cone-sphere), Transmitter Power, PRF and Range Ambiguities, System Losses (qualitative treatment), Illustrative Problems.

UNIT – II

CW and Frequency Modulated Radar:

Doppler Effect, CW Radar – Block Diagram, Isolation between Transmitter and Receiver, Non-zero IF Receiver, Receiver Bandwidth Requirements, Applications of CW radar. Illustrative Problems.FM-CW Radar, FM-CW altimeter, Multiple Frequency CW Radar.

UNIT – III

MTI and Pulse Doppler Radar:

Introduction, Principle, MTI Radar with - Power Amplifier Transmitter and Power Oscillator Transmitter, Delay Line Cancellers – Filter Characteristics, Blind Speeds, Double Cancellation, Range Gated Doppler Filters, Limitations to MTI Performance, MTI versus Pulse Doppler Radar.

UNIT – IV

Tracking Radar:

Tracking with Radar, Sequential Lobing, Conical Scan, Mono pulse Tracking Radar – Amplitude Comparison Mono pulse (one- and two- coordinates), Phase Comparison Mono pulse, Tracking in Range, Acquisition and Scanning Patterns, Comparison of Trackers.

UNIT – V

Detection of Radar Signals in Noise:

Introduction, Matched Filter Receiver – Response Characteristics and Derivation, Correlation detection and Cross-correlation Receiver, Efficiency of Non-Matched Filters, Matched Filter with Non-white Noise, Noise Figure and Noise Temperature.

Radar Receivers: Displays – types. Duplexers – Branch type and Balanced type, Circulators as Duplexers. Introduction to Phased Array Antennas – Basic Concepts, Radiation Pattern, Beam Steering and Beam Width changes, Series versus parallel feeds, Applications, Advantages and Limitations, Radomes.

Text Books:

1. Introduction to Radar Systems, Merrill I. Skolnik, TMH Special Indian Edition, 2nd Edition, ISBN: 9780070634411.
2. Radar: Principles, Technology, Applications, Byron Edde, Pearson Education, ISBN: 9788131713839.

Reference Books:

1. Radar Principles – Peebles, Jr., P.Z., Wiley, New York, ISBN: 9780471252054.
2. Radar Handbook, Merrill I. Skolnik, McGraw Hill, Third, 3rd Edition, ISBN: 9780471252054.
3. Introduction to Radar System, KK Sharma, S.K. Kataria & Sons, 1stEdition, 2023, ISBN: 9789350142615.

Web Links:

1. https://www.jlab.org/ir/MITSeries
2. https://ocw.mit.edu/resources/res-ll-001
3. https://onlinecourses.nptel.ac.in/noc24_ee104

Soft Computing Techniques

	L	T	P	C
Course Code:2501EC51	**2**	**1**	**0**	**3**

Course Outcomes:

At the end of the course, student will be able to:

CO1: Discuss the basic concepts of soft computing techniques.
CO2: Explain Fuzzy systems, components and their applications.
CO3: Demonstrate Fuzzy modeling and control schemes for nonlinear systems.
CO4: Infer Genetic Algorithm for solving the optimization problems.
CO5: Develop proficiency in the Back Propagation algorithm for training Multilayer Perceptron networks.

Mapping of Course Outcomes with Program Outcomes:

CO/PO	PO 1	PO 2	PO 3	PO 4	PO 5	PO 6	PO 7	PO 8	PO 9	PO 10	PO 11
CO1	3	2	-	-	-	-	-	-	-	-	-
CO2	3	3	-	-	-	-	-	-	-	-	-
CO3	3	3	1	-	-	-	-	-	-	-	-
CO4	2	3	1	-	-	-	-	-	-	-	-
CO5	2	3	1	-	-	-	-	-	-	-	-

Mapping of Course Outcomes with Program Specific Outcomes:

CO/PSO	PSO1	PSO2
CO1	2	-
CO2	2	-
CO3	2	-
CO4	2	-
CO5	2	-

UNIT – I

Introduction:

Concept of computing systems, Soft computing versus Hard computing, Characteristics of Soft computing, Introduction to Fuzzy Computing, Neural Computing, Some applications of Soft computing techniques.

UNIT – II

Fuzzy Sets and Fuzzy Logic:

Introduction, Fuzzy Sets Versus Crisp Sets, Operations on Fuzzy Sets, Extension Principle, Fuzzy Relations and Relation Equations, Fuzzy Numbers, Linguistic Variables, Fuzzy Logic, Linguistic Hedges, Applications.

UNIT – III

Inference in Fuzzy Logic:

Fuzzy if-then rules, Fuzzy implications and Fuzzy algorithms, Fuzzifications, Inferencing, and De-fuzzifications, Fuzzy modeling and control schemes for nonlinear systems, Fuzzy Pattern Recognition, Fuzzy Image Processing, Fuzzy Database.

UNIT – IV

Genetic Algorithm:

Basic concept of Genetic algorithm and detail algorithmic steps, Search space, working principle. Encoding: binary, Octal, Hexadecimal, permutation, Value and Tree. Decoding, fitness function, Selection: Roulette wheel, Boltzmann, Tournament, Rank and Steady-state. Crossover: single-point, two-point, multi-point, uniform, matrix and crossover rate, Mutation: mutation, mutation rate, Ant-colonyOptimization, Particle Swarm Optimization, Solving problems using GA.

UNIT – V

Artificial Neural Networks:

Concept of Artificial Neural Networks and its basic mathematical model, McCulloch-Pitts neuron model, Single Neuron/Perceptron networks: training methodology, Typical application to linearly separable problems. Feed-forward Multilayer Perceptron, Multilayer Perceptron: Back propagation algorithm, virtues and limitation of BP algorithm, Modifications to back-propagation, Hopfield network.

Text Books:

1. Neural Networks, Fuzzy Systems and Evolutionary Algorithms: Synthesis andApplications, 2nd Edition, S. Rajasekharan, G. A. Vijayalakshmi Pal, Prentice Hall India, ISBN: 978-8120353343
2. Foundations of Neural Networks, Fuzzy Systems, and Knowledge Engineering, Nikola K. Kasabov, MIT Press, ISBN: 0-262-11212-4

Reference Books:

1. Neural Networks and Learning Machine,Simon Haykins, Prentice Hall India, 3rd Edition, ISBN: 978-0-13-147139-9
2. Fuzzy Logic with Engineering Application, Timothy J. Ross, Wiley, 3rd Edition, ISBN: 0-470-86075-8

Web Links:

1. https://archive.nptel.ac.in/courses/106/105/106105173/ (Prof. Debasis Samanta, IIT Kharagpur)
2. https://onlinecourses.nptel.ac.in/noc21_ge07/preview (Prof. Dilip Kumar Pratihar, IIT Kharagpur)
3. https://www.udemy.com/course/geneticalgorithm
4. https://www.udemy.com/course/fuzzylogic/

Optical Communications

	L	T	P	C
Course Code:2501EC47	**3**	**0**	**0**	**3**

Course Outcomes:

At the end of the course, student will be able to:

CO1: Realize the significance of optical fiber communications.
CO2: Recognize the construction and characteristics of optical fiber cable.
CO3: Illustrate the knowledge of optical signal sources and power launching.
CO4: Examine and understand the operation of various optical detectors.
CO5: Summarize the performance metrics of optical systems and WDM system.

Mapping of Course Outcomes with Program Outcomes:

CO/PO	PO 1	PO 2	PO 3	PO 4	PO 5	PO 6	PO 7	PO 8	PO 9	PO 10	PO 11
CO1	3	2	2	-	-	-	-	-	-	-	1
CO2	3	1	3	-	-	-	-	-	-	-	1
CO3	2	3	2	-	-	-	-	-	-	-	1
CO4	3	2	2	-	-	-	-	-	-	-	1
CO5	2	3	1	-	-	-	-	-	-	-	1

Mapping of Course Outcomes with Program Specific Outcomes:

CO/PSO	PSO1	PSO2
CO1	2	-
CO2	2	-
CO3	2	-
CO4	2	-
CO5	2	-

UNIT – I

Overview of Optical Fiber Communication:

The general optical fiber communication system, Optical fiber wave guides, Ray theory transmission, Total Internal Reflection, acceptance angle, Cylindrical fibers- Modes Fiber materials, fiber fabrication techniques, fiber optic cables, classification of Optical Fibers: single mode fibers, graded index fibers.

UNIT – II

Signal Distortion In Optical Fibers:

Attenuation, absorption, scattering and bending losses, core and cladding losses, information capacity determination, group delay, Types of dispersion - material dispersion, wave-guide dispersion, polarization mode dispersion, intermodal dispersion, pulse broadening.

UNIT – III

Optical Sources:

Intrinsic and extrinsic materials-direct and indirect band gaps-LED-LED structures surface emitting LED-edge emitting LED-quantum efficiency and LED power-light source materials modulation of LED.

UNIT – IV

Optical Detectors:

Physical principles of PIN and APD, detector response time, temperature effect on avalanche gain, comparison of photo detectors.

UNIT – V

Optical System Design:

Considerations, component choice, multiplexing, point-to- point links, system considerations, link power budget with examples. WDM –passive DWDM components-elements of optical networks-SONET/SDH.

Text Books:

1. Optical Fiber Communications, Gerd Keiser, Tata Mc Graw-Hill International edition, 5th Edition,ISBN: 978-1259006876.
2. Optical Fiber Communications , John M. Senior, PHI, 3rd Edition, ISBN: 978-9332535787

Reference Books:

1. Fiber Optic Communication,J. C. Palais, Pearson Prentice Hall,ISBN: 978-8131717912.
2. Optoelectronics and Photonics: Principles and Practices, S.O. Kasap, Pearson Prentice Hall, 2nd Edition,ISBN: 978-0132151498.

Web Links:

1. http://nptel.ac.in/courses/117104127/2
2. https://www.linktionary.com/f/fiber-optic.html

Satellite Communications

	L	T	P	C
Course Code:2501EC50	**3**	**0**	**0**	**3**

Course Outcomes:

At the end of the course, student will be able to:

CO1: Summarize the trends of satellite communications.
CO2: Illustrate the orbital effects on satellite communication and associated sub systems.
CO3: Compare the multiple access techniques.
CO4: Analyze the parameters to enhance the satellite link performance and the satellite based link designs.
CO5: Outline the satellite-based navigation systems.

Mapping of Course Outcomes with Program Outcomes:

CO/PO	PO 1	PO 2	PO 3	PO 4	PO 5	PO 6	PO 7	PO 8	PO 9	PO 10	PO 11
CO1	3	2	2	-	-	-	-	-	-	-	1
CO2	3	2	2	-	-	-	-	-	-	-	1
CO3	2	3	2	-	-	-	-	-	-	-	1
CO4	2	2	3	-	-	-	-	-	-	-	1
CO5	2	2	2	-	-	-	-	-	-	-	1

Mapping of Course Outcomes with Program Specific Outcomes:

CO/PSO	PSO1	PSO2
CO1	2	-
CO2	2	-
CO3	2	-
CO4	2	-
CO5	2	-

UNIT – I

Introduction:

Origin of satellite communications, historical back-ground, basic concepts of satellite communications, frequency allocations for satellite services, future trends of satellite communications. Orbital mechanics and launchers: orbital mechanics, look angle determination, orbital perturbations, orbital determination, launches and launch vehicles, orbital effects in communication systems performance.

UNIT – II

Satellite Subsystems:

Introduction-attitude and orbit control system, telemetry, tracking, commanding and monitoring, power systems, communication subsystems, satellite antennas subsystems, propulsion subsystems equipment reliability and space qualification.

UNIT – III

Multiple Accesses Techniques:

Frequency Division Multiple Access (FDMA), intermodulation, calculation of C/N. Time Division Multiple Access (TDMA), frame structure, slotted aloha spread spectrum methodology.

UNIT – IV

Satellite Link Design:

Basic link analysis, uplink and downlink design equation, free space loss-atmospheric effects, ionospheric scintillation, rain induced attenuation and interference, system noise temperature, link design with and without frequency reuse.

UNIT – V

Satellite Applications:

Mobile satellite services: GSM, LEO, MEO, Satellite Navigational System-GPS, Satellite applications, VSAT , DTH television principles – Direct broadcast radios ,INSAT ,IRS satellites ,PSLVs ,GSLVs.

Text Books:

1. Satellite Communications ,Timothy Pratt & Jeremy Allnutt, WSE, John Wiley & Sons Publications,3rdEdition, October2019, ISBN:978-1119482178.
2. Satellite Communications Engineering-,Wilbur L. Pritchard, Robert A Nelson, and Henri G. Suyderhoud, Pearson Publications, 2ndEdition,ISBN: 978-0137914685.

Reference Books:

1. Satellite Communication, D.C Agarwal & Rishabh Anand, Khanna Publications, 1stEdition, 2021,ISBN: 978-8194752844.
2. Satellite Communications: Design Principles- M. Richharia, B S publications, 2ndEdition,ISBN: 978-0070523746.

Web Links:

1. https://archive.nptel.ac.in/courses/117/105/117105131
2. https://www.coursera.org/learn/satellite-communications

Pattern Recognition

	L	T	P	C
Course Code:2501EC48	**2**	**0**	**0**	**2**

Course Outcomes:

At the end of the course, student will be able to:

CO1: Summarize the various techniques involved in pattern recognition.
CO2: Categorize the various pattern recognition techniques into supervised and unsupervised.
CO3: Illustrate the artificial neural network-based pattern recognition.
CO4: Discuss the applications of pattern recognition in various applications.
CO5: Evaluate the performance of speech recognition systems and optimize them for real-world applications.

Mapping of Course Outcomes with Program Outcomes:

CO/PO	PO 1	PO 2	PO 3	PO 4	PO 5	PO 6	PO 7	PO 8	PO 9	PO 10	PO 11
CO1	3	2	2	-	-	-	-	-	-	-	-
CO2	3	3	2	-	-	-	-	-	-	-	-
CO3	3	2	3	-	-	-	-	-	-	-	-
CO4	2	2	2	-	-	-	-	-	-	-	-
CO5	3	3	3	-	-	-	-	-	-	-	-

Mapping of Course Outcomes with Program Specific Outcomes:

CO/PSO	PSO1	PSO2
CO1	2	-
CO2	2	-
CO3	2	-
CO4	2	-
CO5	2	-

UNIT – I

Introduction:

Fundamental concepts and blocks of a typical pattern recognition system. Decision functions- role and types, pattern and weight space, properties and implementation of decision functions.

UNIT – II

Feature Identification and Feature Selection:

Feature identification, selection and extraction. Distance measures, clustering transformation and feature ordering, clustering in feature selection, feature selection through maximization and approximations.

UNIT – III

Pattern Classification:

Pattern classification by distance functions. Clusters and cluster seeking algorithms. Pattern classification by likelihood functions. Baye's classifier and performance measures.

UNIT – IV

Artificial Neural Network:

Artificial neural network model, Neural network-based pattern associators, Feed forward networks and training by back-propagation- ART networks.

UNIT – V

Applications of Statistical and Neural Network:

Applications of statistical and neural network – based pattern classifiers in speech recognition, image recognition and target recognition.

Text Books:

1. Pattern Recognition Priciples by J.I. Tou & R.C. Gonzalez, Addition-Wesley,ISBN: 9780201075878.
2. Pattern Recognition - Statistiucal, Structural and Neural Approaches by R. Schalkoff, John Wiley,ISBN: 978-8126513703.

Reference Books:

1. Pattern Recognition - A Statistical Approach by P.A. Devijer & J. Kittler,Prentice-Hall,ISBN: 978-0136542360.
2. Pattern recognition and machine learningby Christopher. M. Bishop, Springer,ISBN: 978-1493938438.

Web Links:

1. https://www.geeksforgeeks.org/pattern-recognition-introduction
2. https://archive.nptel.ac.in/courses/117/105/117105101/

Wireless Communications

	L	T	P	C
Course Code:2501EC52	**2**	**1**	**0**	**3**

Course Outcomes:

At the end of the course, student will be able to:

CO1: Illustrate the basic concepts of cellular networks.
CO2: Interpret concepts of mobile radio propagation.
CO3: Distinguish the concepts of modulation techniques and diversity.
CO4: Analyse the concepts of multiple access techniques.
CO5: Infer the wireless networking methods.

Mapping of Course Outcomes with Program Outcomes:

CO/PO	PO 1	PO 2	PO 3	PO 4	PO 5	PO 6	PO 7	PO 8	PO 9	PO 10	PO 11
CO1	3	2	1	-	-	-	-	-	-	-	1
CO2	2	2	1	-	-	-	-	-	-	-	1
CO3	2	2	1	-	-	-	-	-	-	-	1
CO4	2	2	1	-	-	-	-	-	-	-	1
CO5	2	2	1	-	-	-	-	-	-	-	1

Mapping of Course Outcomes with Program Specific Outcomes:

CO/PSO	PSO1	PSO2
CO1	2	-
CO2	2	-
CO3	2	-
CO4	2	-
CO5	2	-

UNIT – I

Cellular System Design:

Introduction-frequency reuse, channel assignment strategies, Handoff strategies: prioritizing handoffs, practical handoff considerations, Interference and system capacity: Co-channel interference and system capacity, channel planning for wireless systems, adjacent channel interference, power control for reducing interference, trunking and grade of service.

UNIT – II

Mobile Radio Propagation:

Large scale path loss: Introduction to radio wave propagation, free space propagation model, small scale multipath propagation, fading effects due to multipath time delay spread, fading effects due to Doppler spread.

UNIT – III

Modulation Techniques and Diversity:

Digital Modulation: Factors that influence the choice of digital modulation, Spread Spectrum Modulation Techniques: Pseudo- Noise (PN) Sequences, Direct Sequence Spread Spectrum (DS-SS) - Diversity techniques: Practical space diversity considerations, polarization diversity, frequency diversity, time diversity.

UNIT – IV

Multiple Access Techniques:

Introduction to multiple access-Spread Spectrum Multiple Access, Code Division Multiple Access (CDMA), Orthogonal Frequency Division Multiple Access (OFDMA), Space Division Multiple Access (SDMA),Packet Reservation Multiple Access (PRMA), Capacity of Cellular Systems.

UNIT – V

Wireless Networking:

Network transmission hierarchy, traffic routing in wireless networks: Circuit switching, packet switching, cellular packet, switched architecture, network databases: distributed database for mobility management, Universal Mobile Telecommunication Systems (UMTS).

Text Books:

1. Wireless Communications, Rappaport, Pearson Education, 2nd Edition, ISBN: 9788131731864
2. Wireless Communication, Andrea Goldsmith, Cambridge University Press, ISBN: 9780521837163

Reference Books:

1. Wireless Communications, Andreas.F. Molisch, John Wiley, India, 3rd Edition, November2022, ISBN: 9781119117209
2. Wireless Communication, Upena Dalal, Oxford University Press, 1st Edition, ISBN: 9780198060666

Web Links:

1. https://onlinecourses.nptel.ac.in/noc21_ee66/preview, by Prof. R. David Koilpillai, IIT,Madras.
2. https://archive.nptel.ac.in/courses/117/104/117104117/ by Prof. Aditya K Jagannatham, IIT, Kanpur.

Wireless Sensor Networks

	L	T	P	C
Course Code:2501EC53	**3**	**0**	**0**	**3**

Course Outcomes:

At the end of the course, student will be able to:

CO1: Identify the components of Wireless Sensor Networks.
CO2: Develop node architecture for specific applications.
CO3: Realize the challenges in establishment of infrastructure.
CO4: Program sensor network platforms using specialized operating system.
CO5: Summarize the challenges in Sensor Network protocols.

Mapping of Course Outcomes with Program Outcomes:

CO/PO	PO 1	PO 2	PO 3	PO 4	PO 5	PO 6	PO 7	PO 8	PO 9	PO 10	PO 11
CO1	3	2	2	-	-	-	-	-	-	-	1
CO2	3	2	3	-	-	-	-	-	-	-	1
CO3	2	3	2	-	-	-	-	-	-	-	1
CO4	2	2	2	-	-	-	-	-	-	-	1
CO5	2	1	1	-	-	-	-	-	-	-	1

Mapping of Course Outcomes with Program Specific Outcomes:

CO/PO	PSO1	PSO2
CO1	2	-
CO2	2	-
CO3	2	-
CO4	2	-
CO5	2	-

UNIT – I

Introduction:

Constraints and Challenges, Opportunities and Challenges in Wireless Sensor Networks, Advantages of Sensor Networks (Energy Advantage and Detection Advantage), Sensor Network Applications, Smart Transportation, Collaborative Processing

UNIT – II

Sensor Network Architecture and Applications:

Introduction, Functional Architecture for Sensor Networks, Sample Implementation Architectures, Classification of WSNs, Characteristics, Technical Challenges, and Design Directions, Technical Approaches, Coverage in Wireless Sensor Networks, Location in Wireless Sensor Networks, Data Gathering and Processing.

UNIT – III

Infrastructure Establishment:

Topology Control, Clustering, Time Synchronization, Localization and Localization Services.

UNIT – IV

Sensor Network Platforms and Tools:

Individual Components of SN Nodes, Sensor Network Node, WSNs as Embedded Systems, Sensor Node Hardware, Sensor Network Programming Challenges.

UNIT – V

Taxonomy of Routing Techniques:

Routing Protocols, Applications/Application Layer Protocols, Localization Protocols, Time Synchronization Protocols, Transport Layer Protocols, Network Layer Protocols, Data Link Layer Protocols.

Text Books:

1. Wireless Sensor Networks, F. Zhao, C Guibas, Morgan Kaufmann, Elsevier,ISBN: 978-1558609143.
2. Hand book of Sensor Networks, Mohammad Ilyas, Imad Mahgoub, , CRC Press,ISBN: 9780429205576.

Reference Books:

1. Wireless Sensor Networks- Technology, Protocols, and Applications,Kazem Sohraby, Daniel Minoli, & Taieb Znati, John Wiley,ISBN: 978-0-470-11275-5.
2. Wireless Sensor Networks- An Information Processing Approach, Feng Zhao & Leonidas J. Guibas,Elsevier,ISBN: 9781558609143.

Web Links:

1. https://archive.nptel.ac.in/noc/courses/noc17/SEM1/noc17-cs07/, Prof.S Misra, IIT- Madras
2. https://onlinecourses.nptel.ac.in/noc22_ee72/preview,Prof.Aditya K Jagannatham, IIT-Madras.

Minor Stream: Space Technology

Course Code	Course Name	Level	L	T	P	C	CIE	SEE	Total	Pre-requisite
2501EC54	Introduction to Space Laws	IC	3			3	50	50	100	-
2501EC55	Aircraft Communication Systems	IC	2	1		3	50	50	100	-
2501EC57	Aircraft Navigation Systems	IC	3			3	50	50	100	-
2501EC62	Missile & Space Vehicle Guidance & Control	IC	2			2	50	50	100	-
2501EC60	Flight Control Systems	IC	3			3	50	50	100	-
2501EC58	Avionics Embedded Systems	IC	2	1		3	50	50	100	-
2501EC59	Avionics Network Technology	AC	3			3	50	50	100	-
2501EC64	Unmanned Aircraft Systems	AC	3			3	50	50	100	-
2501EC56	Aerospace Electromagnetic Compatibility	AC	2	1		3	50	50	100	-
2501EC61	Global Navigation Satellite Systems & Applications	AC	3			3	50	50	100	SC
2501EC63	Remote Sensing & Digital Image Processing of Satellite Data	AC	3			3	50	50	100	DIP
Total			**29**	**3**		**32**				

Introduction to Space Laws

	L	T	P	C
Course Code:2501EC54	**3**	**0**	**0**	**3**

Course Outcomes:

At the end of the course, student will be able to:

CO1: Infer the foundational principles and treaties of international space law, including the Outer Space Treaty, the Moon Agreement, and the Rescue Agreement.

CO2: Ability to summarize key provisions of major space treaties.

CO3: Critical analysis of national space policies and their alignment with international laws.

CO4: Discuss the legal implications of space resource utilization.

CO5: Discuss the legal obligations for environmental protection in space.

Mapping of Course Outcomes with Program Outcomes:

CO/PO	PO 1	PO 2	PO 3	PO 4	PO 5	PO 6	PO 7	PO 8	PO 9	PO 10	PO 11
CO1	2	1	1	-	-	-	-	-	-	-	1
CO2	2	1	2	-	-	-	-	-	-	-	1
CO3	2	1	2	-	-	-	-	-	-	-	1
CO4	2	1	2	-	-	-	-	-	-	-	1
CO5	2	1	2	-	-	-	-	-	-	-	1

Mapping of Course Outcomes with Program Specific Outcomes:

CO/PSO	PSO1	PSO2
CO1	2	-
CO2	2	-
CO3	2	-
CO4	2	-
CO5	2	-

UNIT-I

Basic concepts of international law and space law: Introduction to international law, The Outer Space Treaty and the fundamental principles of space law, Other space treaties and General Assembly resolutions, National regulations, commercialization and privatization.

UNIT-II

Remote sensing/GIS, satellite meteorology and global climate + international law: International law relating to remote sensing, National legislation for remote sensing, Regional and global agreements on remote sensing, Sources of remote sensing data.

UNIT-III

International laws on Satellite communications: Overview of international law on satellite communications, Technical standards and national licensing, International trade in satellite communication services and global mobile personal communication services, Satellite broadcasting.

UNIT-IV

International law on Global navigation satellite systems (GNSS): International institutional context for GNSS operations, GNSS providers and GNSS augmentation, GNSS users, Legal framework for GNSS services, GNSS services.

UNIT-V

Space Law relating to commercial space activities: Legal issues in emerging trends of space activities - Human space flight, tourism, resource utilization, small satellite constellations, IPR.

Text Books:

1. Space Law - A treatise, FranciS LyaLL and Paul B. LarSen, Ashgate publishing Limited, England, ISBN: 978-1472447821.
2. Recent trends in international space law and policy, V.S Mani, S.Bhatt, V.Balakista Reddy, Asia Law house, ISBN: 978-9385556791.

Reference Books:

1. Handbook of space law, Frans von der Dunk, Fabio Tronchetti, Edward Elgar Publishing Limited, UK, ISBN: 978-1784713638.
2. Recent Developments in Space Law - Opportunities &Challenges, R. Venkata Rao V. Gopalkrishnan, Kumar Abhijeet, Springer, ISBN: 978-9811049255.

Aircraft Communication Systems

	L	T	P	C
Course Code:2501EC55	**2**	**1**	**0**	**3**

Course Outcomes:

At the end of the course, student will be able to:

CO1: Explain the terminology of aircraft communication.

CO2: Learn the wave propagation types to be used for effective communication.

CO3: Aware of encryption standards in communication systems

CO4: Examine and understand the aircraft data links, communication band allotted for different satellites.

CO5: Get brief insight of future airborne communication systems – software defined radio.

Mapping of Course Outcomes with Program Outcomes:

CO/PO	PO 1	PO 2	PO 3	PO 4	PO 5	PO 6	PO 7	PO 8	PO 9	PO 10	PO 11
CO1	3	2	-	-	-	-	-	-	-	-	1
CO2	3	1	-	-	-	-	-	-	-	-	1
CO3	2	3	2	-	-	-	-	-	-	-	1
CO4	3	2	2	-	-	-	-	-	-	-	1
CO5	2	3	-	-	-	-	-	-	-	-	1

Mapping of Course Outcomes with Program Specific Outcomes:

CO/PSO	PSO1	PSO2
CO1	2	-
CO2	2	-
CO3	2	-
CO4	2	-
CO5	2	-

UNIT-I

Introduction: The Isotropic Power Source and Free Space Path Loss, Radio Geometry - Radio Horizon Calculations, Earth Bulge Factor – k Factor, Great-circle Distances.

UNIT-II

Wave Propagation: Radio wave propagation – LOS, Complex Propagation: Refraction, Absorption, Non-LOS Propagation, Communication Frequency Bands and Allotment, Legacy and Modern Communications.

UNIT-III

Encryption standards in Communication Systems: Introduction to Cryptography, crypto systems and types. Traditional ciphers - Caesar Cipher, Transposition Cipher, Substitution Cipher.

UNIT-IV

Aircraft and UAV Data Links: Aircraft Data Link: VHF data link – ACARS, VDL 2, VDL 3, and VDL 4. UHF data link - Link-11, Link-16. SELCAL, ALE and HF Data link. UAV Data link functions and attributes, Video & Telemetry Links.

UNIT-V

Future Airborne Communication Systems: Software Defined Radio (SDR)- Need, characteristics and benefits, design principles, RF front end implementation – purpose, receiver topologies and importance of components.

Text Books:

1. Radio Communication Systems and Networks– Dale Stacey, Wiley, ISBN :978-0470018590.
2. Software Radio: A Modern Approach to Radio Engineering,Jeffrey H. Reed, PEA publication, ISBN: 9780130811585.

Rerference Books:

1. Future Aeronautical Communications, Simon Plass., InTech, ISBN: 978-9533076256.
2. Cryptography and Network Security Principles and Practice, William Stallings, Pearson 6th Edition, ISBN: 978-93325018773.

Web Links:

1.https://nptel.ac.in/courses/101101079
2. Fiber-Optic Cable (Linktionary term)

Aircraft Navigation Systems

	L	T	P	C
Course Code:2501EC57	**3**	**0**	**0**	**3**

Course Outcomes:

At the end of the course, student will be able to:

CO1: Describe the various types of radio navigation systems.
CO2: Explain the architecture and components of inertial navigation systems.
CO3: Design and implement inertial navigation systems.
CO4: Demonstrate knowledge of practical applications of satellite and hybrid navigation systems.
CO5: Discuss the integration and interoperability of landing aids.

Mapping of Course Outcomes with Program Outcomes:

CO/PO	PO 1	PO 2	PO 3	PO 4	PO 5	PO 6	PO 7	PO 8	PO 9	PO 10	PO 11
CO1	2	3	-	-	-	-	-	-	-	-	1
CO2	2	3	-	-	-	-	-	-	-	-	1
CO3	3	1	1	-	-	-	-	-	-	-	1
CO4	2	3	1	-	-	-	-	-	-	-	1
CO5	3	1	-	-	-	-	-	-	-	-	1

Mapping of Course Outcomes with Program Specific Outcomes:

CO/PSO	PSO1	PSO2
CO1	2	-
CO2	2	-
CO3	2	-
CO4	2	-
CO5	2	-

UNIT – I
Radio Navigation Systems

Different Types of navigation, Automatic Direction Finder, VHF Omni-directional Range, Distance Measuring Equipment, Tactical Air Navigation, VORTAC, Doppler Navigation –Beam Configurations.

UNIT – II
Inertial Navigation Sensors

Accelerometer - operating principle, classification- open loop pendulous, closed loop pendulous, vibrating beam and interferometric fibre optic accelerometer.
Gyroscope – Coriolis vibrating gyro, optical gyro – RLG, IFOG – Principle of operation, construction and working.

UNIT – III

Inertial Navigation System

Inertial navigation, Geometry of earth, gravitation and gravity, Reference frame ECI, LPI, ECEF and ENU. Navigation in rotating earth frame, Inertial system, Strap-down navigation.

UNIT – IV

Satellite and Hybrid Navigation System

GPS, position and velocity determination- Error sources, GDOP, position computation process. Velocity measurement, Precise Point Positioning (PPP), Integrated inertial navigation – processing of measurements, Complimentary nature of sensors, GNSS and INS fusion using Kalman filter.

UNIT – V

Landing aids, Secondary Surveillance Radar (SSR)

Low visibility operation, Mechanics of landing. Instrument Landing System(ILS), Satellite Landing Systems, Carrier-Landing Systems. Introduction, SSR modes, Interrogation, Mode-S.

Text Books:

1. Avionics Navigation Systems, Myron Kayton, Walter R. Fried, Wiley-Inter science 2nd Edition, ISBN: 978-0471547952.
2. Fundamentals of Navigation and inertial sensors, Amitava Bose, K.N.Bhat, Thomas Kurian, PHI learning Private limited, ISBN: 978-81-203-4859-2.
3. Radar Principles, Technology, Applications, Byron Edde, LPE, Pearson, ISBN: 978-0137523467

Reference Books:

1. Aircraft Communications & Navigation Systems: Principles Operation and Maintenance, Mike Tooley, \ David Wyatt, Butterworth-Heinemann an imprint of Elsevier, ISBN: 9780750681377.
2. Global Positioning Systems, Inertial Navigation and Integration, Mohinder S. Grewal, Lawrence R. Weill, Angus P. Andrews, Wiley-Inter science, 2nd Edition, ISBN: 978-0470041901.

Web Links:

1. https://onlinecourses.nptel.ac.in/noc23_ce94/
2. https://onlinecourses.nptel.ac.in/noc21_ae12/

Missile &Space Vehicle Guidance & Control

	L	T	P	C
Course Code:2501EC62	**2**	**0**	**0**	**2**

Course Outcomes:

At the end of the course, student will be able to:

CO1: Discuss the basic of Missile Airframes and autopilots.
CO2: Explain the Missile guidance laws and control.
CO3: Describe the launch of strategic missiles.
CO4: Summarize the orbital mechanics of system.
CO5: Demonstrate the satellite guidance in free space.

Mapping of course outcomes with program outcomes:

CO/PO	PO1	PO2	PO3	PO4	PO5	PO6	PO7	PO8	PO9	PO10	PO11
CO 1	2	1	-	-	-	-	-	-	-	-	1
CO 2	3	2	-	-	-	-	-	-	-	-	1
CO 3	2	3	-	-	-	-	-	-	-	-	1
CO 4	2	3	-	-	-	-	-	-	-	-	1
CO 5	2	2	-	-	-	-	-	-	-	-	1

Mapping of course outcomes with program Specific Outcomes:

CO/PSO	PSO 1	PSO 2
CO 1	3	-
CO 2	2	-
CO 3	2	-
CO 4	2	-
CO 5	2	-

UNIT– I
Missile Airframes, Autopilots and Control
Missile aerodynamics: - Force Equations, Moment Equations, Phases of missile flight, Missile control configurations. Missile Mathematical Model, Autopilots - Definitions, Types of Autopilots, Example Applications, Open-loop autopilots, inertial instruments, and feedback.

UNIT – II
Missile Guidance Laws
Tactical Guidance Intercept Techniques, Derivation of the Fundamental Guidance Equations, explicit, Proportional Navigation, Augmented Proportional Navigation, beam riding, bank to turn missile guidance, Three-Dimensional Proportional Navigation.

UNIT – III
Strategic Missiles
Introduction, The Two-Body Problem, Lamberts Theorem, First-Order Motion of a Ballistic Missile Correlated Velocity and Velocity-to-Be-Gained Concepts, Derivation of

the Force Equation for Ballistic Missiles, Atmospheric Re-Entry, Ballistic Missile Intercept.

UNIT – IV

Orbital Mechanics

Orbital Transfers: Impulse Transfer between Circular Orbits, Hofmann Transfer, Other Coplanar and Non-coplanar Transfers-Orbital Plane Changes.

UNIT – V

Satellite Guidance

Space Plight, Space Vehicle Trajectories, Launch Vehicle Guidance Implicit and Explicit Guidance-Open loop and Closed loop Guidance, FE guidance- F. guidance-VG guidance-Q guidance-Delta guidance.

Text Books:

1. Fundamentals of Astrodynamics, Roger.R. Bate, Dover Publications, ISBN: 978-0486600611.
2. Navigation and Guidance in Space, Edwards V.B.Stearns, Prentice Hall, ISBN: B0007E24DA.

Reference Books:

1. Space Flight Dynamics, William Wiesel, Tata McGraw Hill, Third Edition, ISBN: 978-1452879598.
2. Missile Guidance and Control systems, GM Siouris, Springer, ISBN: 978-0-387-00726.

Web Links:

1. https://archive.nptel.ac.in/courses/101/108/101108054/,Debasish Gose,IISC Bangalore.
2. https://apps.dtic.mil/sti/tr/pdf/AD0813281.pdf

Flight Control Systems

	L	T	P	C
Course Code:2501EC60	**3**	**0**	**0**	**3**

Course Outcomes:
At the end of the course, student will be able to:

CO1: Discuss the static stability of an aircraft.
CO2: Interpret the Equations of Motions under different conditions.
CO3: Aware of Aircraft Response to Control or Atmospheric Inputs.
CO4: Infer classical control theory in aircraft design.
CO5: Interpret the essence of Auto pilot and aircraft design.

Mapping of Course Outcomes with Program Outcomes:

CO/PO	PO 1	PO 2	PO 3	PO 4	PO 5	PO 6	PO 7	PO 8	PO 9	PO 10	PO 11
CO1	3	2	2	-	-	-	-	-	-	-	1
CO2	3	1	2	-	-	-	-	-	-	-	1
CO3	2	3	2	-	-	-	-	-	-	-	1
CO4	3	2	1	-	-	-	-	-	-	-	1
CO5	2	3	2	-	-	-	-	-	-	-	1

Mapping of Course Outcomes with Program Specific Outcomes:

CO/PSO	PSO1	PSO2
CO1	2	-
CO2	2	-
CO3	2	-
CO4	2	-
CO5	2	-

UNIT -I
Static Stability and Control: Introduction, Longitudinal Control, Stick Forces, Definition of Directional Stability, Directional Control, Roll Stability, Roll Control.

UNIT-II
Aircraft Equations of Motion-1: Introduction, Derivation of rigid Body Equations of Motion, Orientation and Position of the Airplane, Gravitational and Thrust Forces, Small Disturbance theory, Aerodynamic Force and Moment Representation.

UNIT -III
Aircraft Equations of Motion-2: Pure Pitching Motion, Stick Fixed Longitudinal Motion, Longitudinal Approximations, Influence of Stability Derivatives, Pure Rolling Motion, Pure Yawing Motion, Lateral Direction Equations of Motion.

UNIT -IV
Aircraft Response to Control or Atmospheric Inputs: Longitudinal Flying Qualities, Lateral Flying Qualities, Inertial Coupling, Equations of Motion in a Non Uniform Atmosphere, Pure Vertical or Plunging Motion.

UNIT -V

Control Theory applied to Aircraft design: Applications of Classical Control Theory to Aircraft Autopilot Design: Aircraft Transfer Functions Displacement Autopilot, Stability Augmentation, and Instrument Landing.

Text Books:

1. Flight Dynamics, Simulation, and Control for Rigid and Flexible Aircraft, Ranjan Vepa, CRC Press Taylor & Francis Group, ISBN: 9781466573352.

2. Flight Stability and Automatic Control, Robert C Nelson, Tata McGraw-Hill, 2nd Edition, ISBN : 978-0070661103.

Reference Books:

1. Automatic control of Aircraft and missiles, Blakelock, J.H, John Wiley Sons, New York, ISBN: 978-
0471506515.

2. Aircraft control & simulation, Stevens B.L & Lewis F.L, John Wiley Sons, New York, ISBN: 978-0471371458.

Web Links:

1. https://nptel.ac.in/courses/101104330

Avionics Embedded Systems

	L	T	P	C
Course Code:2501EC58	**2**	**1**	**0**	**3**

Course Outcomes:
At the end of the course, student will be able to:

CO1: Summarize the building blocks of an embedded system.
CO2: Apply standard guidelines for development of Aircraft Systems.
CO3: Illustrate the services and tasks in RTOS.
CO4: Compare continuous dynamics and discrete dynamic mechanics.
CO5: Distinguish state machines based on computational models.

Mapping of Course Outcomes with Program Outcomes:

CO/PO	PO1	PO2	PO3	PO4	PO5	PO6	PO7	PO8	PO9	PO10	PO11
CO1	2	-	-	-	-	-	-	-	-	-	1
CO2	2	2	-	-	-	-	-	-	-	-	1
CO3	2	-	-	-	-	-	-	-	-	-	1
CO4	2	2	-	-	-	-	-	-	-	-	1
CO5	2	2	-	-	-	-	-	-	-	-	1

Mapping of Course Outcomes with Program Specific Outcomes:

CO/PSO	PSO1	PSO2
CO1	-	2
CO2	-	2
CO3	-	2
CO4	-	2
CO5	-	2

UNIT - I
Introduction to Embedded Systems
Categories, Overview of architecture, Characteristics, Recent trends, Architecture of Embedded systems: Hardware Architecture: CPU, Memory, Clock, Watch dog timer, I/O, Debug port, Communication interface, Power Supply.

UNIT – II
Embedded System Development
Development Process, Requirements, Design, Implementation, Integration and Testing, Packaging, Configuration Management. ARP-4754 Standard for systems engineering guidelines.

UNIT – III
RTOS
Real time concepts, Kernel Structure, Tasks and Scheduler, Time Management, Event Control blocks, Semaphore management, Mutex, Event Management, Message mail box management, Message Queue management, memory management.

UNIT – IV

Modelling Dynamic Behaviors-1

Continuous Dynamics: Newtonian Mechanics, Actor Models, Properties of Systems, Feedback Control.

Discrete Dynamics: Discrete Systems, The Notion of State, Finite-State Machines, Extended State Machines, Non-determinism, Behaviors and Traces.

UNIT – V

Modelling Dynamic Behaviors-2

Composition of State Machines: Concurrent Composition, Hierarchical State Machines.
Concurrent Models of Computation: Structure of Models, Synchronous-Reactive Models, Dataflow Models of Computation.

Text Books:

1. Introduction to Embedded Systems: A cyber physical systems approach by Edward Ashford Lee and Sanjit Arun kumar Seshia, MIT Press, Second Edition, ISBN: 978-0262533812.
2. Embedded /Real-Time Systems: Concepts, Design & Programming by K.V.K.K.Prasad Dreamtech Press, ISBN: 978-8177224610 .

Reference Books:

1. Embedded System Design: A Unified Hardware/Software Approach by Frank Vahid, Tony Givargis, Wiley India Edition, 3rd Edition, ISBN: 978-8126508372.
2. Computers as Components-Principles of Embedded Computer System Design by Wayne Wolf, Morgan Kaufman Publisher, ISBN: 9780128053874.
3. Embedded Systems Architecture, Programming and Design by Rajkamal Tata McGraw Hill, 2nd Edition, ISBN: 978-0070667648.

Web Links:

1. http://www.nptelvideos.in/2012/11/embedded-systems.html

Avionics Network Technology

	L	T	P	C
Course Code:2501EC59	**3**	**0**	**0**	**3**

Course Outcomes:
At the end of the course, student will be able to:

CO1: Demonstrate the design and operation of optical access networks
CO2: Study protocols and standards unique to aviation communications
CO3: Compare sensor network with hoc network
CO4: Explore different network topologies suitable for wireless sensor networks
CO5: Explore the integration of smart antenna systems with various communication systems.

Mapping of Course Outcomes with Program Outcomes:

CO/PO	PO 1	PO 2	PO 3	PO 4	PO 5	PO 6	PO 7	PO 8	PO 9	PO 10	PO 11
CO1	2	3	1	-	-	-	-	-	-	-	1
CO2	2	1	2	-	-	-	-	-	-	-	1
CO3	2	3	2	-	-	-	-	-	-	-	1
CO4	3	3	2	-	-	-	-	-	-	-	1
CO5	3	1	1	-	-	-	-	-	-	-	1

Mapping of Course Outcomes with Program Specific Outcomes:

CO/PSO	PSO1	PSO2
CO1	2	-
CO2	2	-
CO3	2	-
CO4	2	-
CO5	2	-

UNIT– I
Optical Networks: Fiber channel – WDMLAN – Fiber channel-R Fover fiber Highly integrated photonics (HIP) – Routing in optics- Amplification in optics.

UNIT – II
ATN (Aeronautical Telecommunication Network): ATN Concepts – ATN functionality – ATN Components – End Systems – ATN physical and administrative structures – ATN planning and implementation process – ATN Router.

UNIT – III
Wireless Sensor Network Attributes: Introduction-Challenges for wireless sensor networks-Comparison of sensor network with hoc network-single node architecture-Hardware components-energy consumption of sensor nodes.

UNIT – IV

Wireless Sensor Network Architecture: Network architecture-sensor network scenarios-types of sources and sinks-single hop versus multi hop networks-multiple sinks and sources-Design, principles:- Development of wireless sensor networks.

UNIT – V

Wideband Wireless Communication and Networks for Military Avionics: Communication data link (CDL)-IP based routing in FBW-Smart antenna networking.

Text Books:

1. Avionics Data Buses by Carry Spitzer, Fifth Edition, ISBN: 978-1138076983.
2. Smart Antennas for Wireless Communication by Frank Gross, Wiley Publications, Second Edition, ISBN: 978-0071447898.

References Books:

1. Wireless Sensor Networks by C.S.Raghavendra Krishna, M.Sivalingam and Taripznati, Springer publication.
2.Wireless Sensor Networks: Architecture and Protocol by H.Callaway, Edgar, CRS press, ISBN : 978-0849318238.

Web Links:

1.https://onlinecourses.nptel.ac.in/noc20_ae03
2.https://onlinecourses-archive.nptel.ac.in/noc18_cs09

Unmanned Aircraft Systems

	L	T	P	C
Course Code:2501EC64	**3**	**0**	**0**	**3**

Course Outcomes:

At the end of the course, student will be able to:

CO1: Explain the basic concepts of UAV.
CO2: Discuss the basics of airframe.
CO3: Describe the Avionics hardware.
CO4: Summarize the design considerations for communications payload and control.
CO5: Summarize the UAV certification standards.

Mapping of course outcomes with program outcomes:

CO/PO	PO 1	PO 2	PO 3	PO 4	PO 5	PO 6	PO 7	PO 8	PO 9	PO 10	PO 11
CO1	2	1	-	-	-	-	-	-	-	-	1
CO2	3	2	-	-	-	-	-	-	-	-	1
CO3	2	3	-	-	-	-	-	-	-	-	1
CO4	2	3	-	-	-	-	-	-	-	-	1
CO5	2	2	-	-	-	-	-	-	-	-	1

Mapping of course outcomes with program Specific Outcomes:

CO/PSO	PSO1	PSO2
CO1	2	-
CO2	2	-
CO3	2	-
CO4	2	-
CO5	2	-

UNIT– I
Introduction to UAV:
History and Overview, Classes and Missions of UAV's, System composition, few applications of Unmanned Aircraft Systems.

UNIT – II
Design of UAV Systems
Introduction to design and selection of system, Aerodynamics and airframe configurations, Characteristics of Aircraft Types, Design of stealth, Data links.

UNIT – III
Communication and Navigation of UAV
Communication media: Radio communication, Mid-Air collision (MAC) Avoidance, Data Rate and Bandwidth Usage, Antenna Types, NAVSTAR Global Positioning System, TACAN, LORAN-C, Radio Tracking, Inertial Navigation and Control Stations.

UNIT – IV

Development of UAV Systems
System development and certification, System ground testing -UAV component testing, sub-system testing, control station testing and System in flight testing.

UNIT – V

UAV Payloads
Surveillance payloads-overview, image sensors, Weapon payloads, Design issues related to Carriage and delivery of weapons, other issues related to combat operations, other payloads.

Text Books:

1. Introduction to UAV Systems by Paul Gerin Fahlstorm, Wiley Publication, Fourth Edition, ISBN: 9781118396780.
2. Unmanned Aircraft Systems-UVAS Design, Development and Deployment by Reg Austin, Wiley Publication, Third Edition, ISBN: 978-0470058190.

Reference Books:

1. Remote sensing and activation using UAV by Haiyang Chao and Yang Quan Chen, IEEE Press, ISBN: 978-1118122761.
2. Unmanned Aircraft Design A review of fundamentals by Mohammad H. Sadraey, Morgan & Claypool Publishers series, ISBN: 978-1681731681.

Web Links:

1.https://archive.nptel.ac.in/courses/101/104/101104073/,Prof..SaderlaSubrahamanyam,IIT Kanpur.
2.https://www.icao.int/meetings/uas/documents/circular%20328_en.pdf

Aerospace Electromagnetic Compatibility

	L	T	P	C
Course Code:2501EC56	**2**	**1**	**0**	**3**

Course Outcomes:

At the end of the course, student will be able to:

CO1: Explain the concepts of EMI and EMC in transmission.
CO2: Analyse the EMI effect on aircraft.
CO3: Describes the various procedures for radiated measurement systems.
CO4: Analyse the effect of EMI on flight control systems.
CO5: Analyse the effect of EMI on unmanned flight control systems.

Mapping of Course Outcomes with Program Outcomes:

CO/PO	PO 1	PO 2	PO 3	PO 4	PO 5	PO 6	PO 7	PO 8	PO 9	PO 10	PO 11
CO1	3	1	-	-	-	-	-	-	-	-	1
CO2	2	3	-	-	-	-	-	-	-	-	1
CO3	3	2	-	-	-	-	-	-	-	-	1
CO4	2	3	-	-	-	-	-	-	-	-	1
CO5	2	3	-	-	-	-	-	-	-	-	1

Mapping of Course Outcomes with Program Specific Outcomes:

CO/PSO	PSO1	PSO2
CO1	2	-
CO2	2	-
CO3	2	-
CO4	2	-
CO5	2	-

UNIT – I

Introduction to Sources of EMI and EMC

Electromagnetic environment, Concepts, Practical experiences & concerns, Natural and Nuclear sources of EMI, Electromagnetic emissions, Cross talk in transmission lines, Transients in power supply lines, Electromagnetic Interference Principles and types of grounding, Shielding and bonding.

UNIT – II

Effects of EMI on Aircraft and Analysis

HEMP Threat to Aircraft, HEMP Coupling to Aircraft, Lighting interactions with Aircraft, Avionic Equipment functional verification in presence of lighting induced electrical transients.

UNIT – III

Avionics Subsystems Radiated and Conducted Measurement

Motivations for Testing, Test Plans for Avionics Sub-Systems. Open area test sites and measurements. Anechoic chamber, TEM cell, GTEM Cell, Conducted EMI from equipment, Immunity to conducted EMI, Detectors and measurements.

UNIT – IV

EMI Effects in Flight Control Systems and their Mitigations.

Analysis of the Contemporary Aerial EME, Elements of FBW System and Their Susceptibility to EMI, EMI Susceptibilities of FMS, EMC Test Methodologies of FCS.

UNIT – V

EMI Effects on Unmanned Flight Control Systems

EMI Susceptibilities of UAV Flight Control System, How EMI Couples to FCS, Modeling and Simulation, Some Special Considerations for EMI Mitigation.

Text Books:

1. Engineering Electromagnetic Compatibility by Dr.V.P. Kodali, IEEE Publication, Printed in India by S. Chand & Co. Ltd, New Delhi, ISBN: 978-0780347434.
2. Handbook of Aerospace Electromagnetic Compatibility, Reinaldo J. Perez, IEEE Publication, Published by John Wiley & Sons, ISBN: 978-1118910511.

Reference Books:

1. Introduction to Electromagnetic Compatibility, Clayton R Paul, John Wiley, ISBN: 978-0471755005.
2. Principles and Techniques of EMC, Christos Christopoulos, CRC press, 2nd Edition, ISBN: 978-0849370359.
3. Handbook of Aerospace Electromagnetic Compatibility Editor(s): Dr. Reinaldo J. Perez, ISBN: 9781118910511.

Web Links:

1. https://www.amazon.in/Handbook-Aerospace-Electromagnetic-Compatibility-Reinaldo/dp/1118910516
2. https://www.amazon.in/Handbook-Aerospace-Electromagnetic-Compatibility-Reinaldo-ebook/dp/B07L8DZP4F
3. https://books.google.co.in/books/about/Handbook_of_Aerospace_Electromagnetic_Co.html?id=ac95DwAAQBAJ&redir_esc=y

Global Navigation Satellite Systems &Applications

	L	T	P	C
Course Code:2501EC61	**3**	**0**	**0**	**3**

Course Outcomes:

At the end of the course, student will be able to:
CO1: Illustrate the usage of GNSS in position determination
CO2: Classify various navigation satellite systems
CO3: Interpret the GNSS errors and correction methods
CO4: Utilize the GNSS for developing applications
CO5: Summarize the current trends and opportunities of GNSS

Mapping of Course Outcomes with Program Outcomes:

CO/PO	PO1	PO2	PO3	PO4	PO5	PO6	PO7	PO8	PO9	PO10	PO11
CO1	3	2	-	-	-	-	-	-	-	-	1
CO2	3	2	-	-	-	-	-	-	-	-	1
CO3	2	3	-	-	-	-	-	-	-	-	1
CO4	2	-	-	-	-	-	-	-	-	-	1
CO5	3	-	-	-	-	-	-	-	-	-	1

Mapping of Course Outcomes with Program Specific Outcomes:

CO/PSO	PSO1	PSO2
CO1	2	-
CO2	2	-
CO3	2	-
CO4	2	-
CO5	2	-

UNIT– I
Introduction to Global Navigation Satellite System (GNSS), How position is determined by the GNSS, NAVSTAR - Global Positioning System

UNIT – II
Global Navigation Satellite System (GLONASS), BeiDou Navigation Satellite System (BDS), Indian Regional Navigation Satellite System (IRNSS), GALILEO, Quasi-Zenith Satellite System (QZSS).

UNIT – III
Differential Global Navigation Satellite System (DGNSS), REAL-TIME KINEMATIC (RTK), Satellite Based Augmentation System (SBAS), GNSS Errors, GNSS Correction Methods.

UNIT – IV
Why altitude estimated by GNSS receivers is not very accurate, Global Navigation Satellite Systems (GNSS) Applications.

UNIT – V

GNSS: Current Trends and Future, Opportunities in India

Text Books:

1. Environmental Monitoring using GNSS: Global Navigation Satellite Systems, AwangeJ. L, Springer, London, ISBN: 978-3540882558.

2. Global Navigation Satellite Systems: Insights into GPS, Glonass, Galileo, Compass, and Others, BS Publications, New Delhi, ISBN: 978-8178002200.

Reference Books:

1. GNSS – Global Navigation Satellite Systems, Hofmann-Wellenhof.B, Lichtenegger, Wasle, Springer, Verlag Wien, ISBN : 978-3211730126.

2. Global Positioning Systems, Inertial Navigation, and Integration, Grewal, M. S.Weill, L. R. Andrews, John Wiley & Sons, New York.

3. GNSS Systems and Engineering: The Chinese Beidou Navigation and Position Location Satellite, Tan, S., JohnWiley & Sons, Singapore, ISBN: 978-1118897034.

Web Links:

1. https://onlinecourses.nptel.ac.in/noc23_ce94By Prof. Arun K. Saraf , IIT Roorkee

2. https://www.spiceworks.com/tech/iot/articles/what-is-gnss/

Remote Sensing & Digital Image Processing of Satellite Data

	L	T	P	C
Course Code:2501EC63	**3**	**0**	**0**	**3**

Course Outcomes:

At the end of the course, student will be able to:

CO1: Outline the electromagnetic concepts in remote sensing technology
CO2: Contrast satellites based on the remote sensing
CO3: Make use of image interpretation for remote sensing
CO4: Illustrate about image acquisition and enhancement techniques
CO5: Utilize the multispectral transforms for image processing

Mapping of Course Outcomes with Program Outcomes:

CO/PO	PO1	PO2	PO3	PO4	PO5	PO6	PO7	PO8	PO9	PO10	PO11
CO1	3	2	-	-	-	-	-	-	-	-	1
CO2	3	2	-	-	-	-	-	-	-	-	1
CO3	2	2	-	-	-	-	-	-	-	-	1
CO4	3	2	-	-	-	-	-	-	-	-	1
CO5	2	2	-	-	-	-	-	-	-	-	1

Mapping of Course Outcomes with Program Specific Outcomes:

CO/PSO	PSO1	PSO2
CO1	2	-
CO2	2	-
CO3	2	-
CO4	2	-
CO5	2	-

UNIT - I
Development of remote sensing technology and advantages, Different platforms of remote sensing, EM spectrum, solar reflection and thermal emission remote sensing, Interaction of EM radiation with atmosphere including atmospheric scattering, absorption and emission.

UNIT – II
Interaction mechanisms of EM radiation with ground, spectral response curves, Principles of image interpretation, Multi Spectral scanners and imaging devices, Salient characteristics of LANDSAT, IRS, Cartosat, ResourceSat etc. sensors, Image characteristics and different resolutions in Remote Sensing.

UNIT – III
Image interpretation of different geological landforms, rock types and structures, Remote Sensing integration with GIS and GPS, Georeferencing Technique, Basic image enhancement techniques,

Spatial filtering techniques, Image classification techniques, InSAR Technique and its applications, Hyper spectral Remote Sensing, Integrated applications of RS and GIS in groundwater studies, Limitations of Remote Sensing Technique.

UNIT – IV

Different techniques of Image acquisition, Image characteristics and different resolutions in Remote Sensing, EM spectrum, solar reflection and thermal emission remote sensing, Colour representations and transforms, Image Histograms and statistics, Geometric transformations /Georeferencing Technique, Image enhancement techniques.

UNIT – V

Multispectral transforms: scatter plot, principal component analysis and decorrelation stretch, Spatial filtering techniques, Frequency domain - Fourier transformation, Basic Image Compression techniques and different image file formats, Image classification techniques, Principles of image interpretation, SAR Interferometry (InSAR) Technique, Image merging and mosaicking techniques, Applications of Image Analysis, Limitations and future of Digital Image Processing Technique.

Text Books:

1. Introduction to Remote Sensing, James B. Campbell and Randolph H. Wynne, The Guildford Press, New York, 5th Edition, ISBN: 978-1609181765.
2. Remote Sensing and Image Interpretation, Lillesand, T.M., Kiefer, R.W. and Chapman, J.W., John Wiley & Sons, 7th Edition, ISBN:978-1118343289.

Reference Books:

1. Image Interpretation in Geology by Drury, S. A., Allen & Unwin, 2ndEdition, ISBN: 978-0412488801.
2. Introduction to Remote Sensing, Cracknell, A.P., Tylor & Francis, London,2ndEdition, ISBN: 978-0849392559.
3. Digital Image Processing by Gonzalez, Rafael C. and Richard E. Woods, Pearson Education, London,3rd Edition, ISBN:978-0131687288.

Web Links:

1. https://onlinecourses.nptel.ac.in/noc19_ce38By Prof. Arun K. Saraf , IIT Roorkee
2. https://www.geeksforgeeks.org/satellite-image-processing/

UNIVERSITY ELECTIVE COURSES

Branch	Course Code	Course Name	Level	L	T	P	C	CIE	SEE	Offered to	Pre-requisite
CE	2501CE66	Natural Disaster Management & Mitigation		3	0	0	3			EEE, ME, ECE, CSE, IT, AIML, CSE(DS) PT, Min.E	
CE	2501CE81	Wastewater Management		3	0	0	3			EEE,ME, ECE, CSE,IT, AIML, CSE(DS) PT,Min.E	
CE	2501CE82	Integrated Solid Waste Management for a Smart City		3	0	0	3			EEE,ME, ECE, CSE,IT, AIML, CSE(DS) PT,Min.E	
CE	2501CE83	Watershed Management		3	0	0	3			EEE,ME, ECE, CSE,IT, AIML, CSE(DS) PT,Min.E	
EEE	2501EE53	Electric Power Generation, TransmissionC Distribution Systems	AC	3	0	0	3	50	50	CE, ME, ECE, CSE,IT, AIML, CSE(DS) PT,Min.E	
EEE	2501EE36	Electric Energy Storage Systems	FC	3	0	0	3	50	50	CE,ME, ECE, CSE,IT, AIML, CSE(DS) PT,Min.E	
EEE	2501EE43	Electrical safety	IC	3	0	0	3	50	50	CE,ME, ECE, CSE,IT, AIML, CSE(DS) PT,Min.E	
EEE	2501EE54	Hybrid & Electric Vehicles	IC	3	0	0	3	50	50	CE,ECE, CSE,IT, AIML, CSE(DS) PT,Min.E	
ME	2501ME37	Solar Energy Systems	FC	3			3	50	50	CE,EEE, ECE, CSE,IT, AIML, CSE(DS) PT, Min.E	
ME	2501ME58	Industry 5.0 for Engineers	AC	3			3	50	50	CE,EEE, ECE, CSE,IT, AIML, CSE(DS) PT, Min.E	
ME	2501ME73	Organizational Behavior	FC	3			3	50	50	CE,EEE, ECE, CSE,IT, AIML, CSE(DS) PT, Min.E	
ME	2501ME36	Sustainable Energy Systems	FC	3			3	50	50	CE,EEE, ECE, CSE,IT, AIML, CSE(DS) PT, Min.E	
ECE	2501EC97	Biomedical Electronics	FC	3			3	50	50	CE,EEE, ME, CSE, IT, DS, AIML, PT, Min.E, Ag.E	
ECE	2501EC98	Fundamentals of Wireless Communications	FC	3			3	50	50	CE,EEE, ME, CSE, IT, DS, AIML, PT, Min.E, Ag.E	

ECE	2501EC99	Principles of Embedded Systems	FC	3			3	50	50	CE,EEE, ME, CSE, IT, DS, AIML, PT, Min.E, Ag.E	
ECE	2501ECA0	Electronics for Healthcare	FC	3			3	50	50	CE,EEE, ME, CSE, IT, DS, AIML, PT, Min.E, Ag.E	
ECE	2501ECA1	Basics of VLSI Design	FC	3			3	50	50	CE, EEE, ME, CSE, IT, DS, AIML, PT, Min.E, Ag.E	
ECE	2501ECA2	System on Chip Design	FC	3			3	50	50	CE, EEE, ME, CSE, IT, DS, AIML, PT, Min.E, Ag.E	
ECE	2501ECA3	Introduction to Quantum Computing	FC	3			3	50	50	CE,EEE, ME, CSE, IT, DS, AIML, PT, Min.E, Ag.E	
CSE	2501CS03/ 2601DS02	Data Structures* / Data Structures using C++#	FC	2		2	4	50	50	CE, ME, PT, Min.E	PPSC
CSE	2501CS13	Operating Systems	IC	2		1	3	50	50	CE, EEE, ME, ECE, PT, Min.E, Ag.E	-
IT	2501IT05	Database Management Systems	IC	2		2	4	50	50	CE, EEE, ME, ECE, PT, Min.E,Ag.E	PPSC / CP&DS
IT	2501CS07	Computer Networks	AC	3			3	50	50	CE, EEE, ME, ECE, PT, Min.E,Ag.E	-
AI&ML	2501AI02	Artificial Intelligence	FC	2		1	3	50	50	CE, EEE, ECE, PT, Min.E	-
AI&ML	2501AI05	Machine Learning	AC	2		2	4	50	50	CE, ECE, PT, Min.E	DAUP
DS	2501CS34	Fundamental of Data Science	FC	2		1	3	50	50	CE, EEE, ME, ECE, PT, Min.E,Ag.E	PPSC / CP&DS

Natural Disaster Management & Mitigation

(EEE,ME,ECE,CSE,IT,AIML,CSE(DS), PT, Min.E.)

Course Code: 2501CE66

L	T	P	C
3	0	0	3

Course Outcomes:
At the end of the course, student will be able to:

CO1: Explain the aspects of disaster management and adopt remedial measures.
CO2: Explain disaster risk assessment and coping measures.
CO3: Explain the vulnerability conditions.
CO4: Assess the impact of hazards on structures.
CO5: Adopt the rehabilitation procedures.

Mapping of Course Outcomes with Program Outcomes:

CO/PO	PO1	PO2	PO3	PO4	PO5	PO6	PO7	PO8	PO9	PO10	PO11
CO1	2								2		
CO2		1					3		2		
CO3		1							2		
CO4	2						3		2		
CO5	2						3		2		

UNIT – I
Introduction:
Introduction Concept of Disaster Management. Types of Disasters. Disaster mitigating agencies and their organizational structure at different levels.

UNIT – II
Overview of Disaster Situations:
Overview of Disaster Situations in India Vulnerability of profile of India and Vulnerability mapping including disaster – prone areas, communities, places. Disaster preparedness – ways and means; skills and strategies; rescue, relief reconstruction. Case Studies: Lessons and Experiences from Various Important Disasters in India and Biological disasters – SARS-spread and transmisstions -pandemic, endemic and epidemic.

UNIT – III
Flood:
Flood and Drought Disaster Raising flood damage, assessing flood risk, flood hazard assessment, flood impact assessment, flood risk reduction options. Drought and development, relief management and prevention, drought mitigation and management-integrating technology and people.

UNIT – IV

Overview of Disaster Situations:

Landslide and Earthquake Disaster Land slide hazards zonation mapping and geo environmental problems associated with the occurrence of landslides. The use of electrical resistivity method in the study of landslide. Causes and effects of earthquakes. Secondary effects. Criteria for earthquake resistant design.

UNIT – V

Cyclone and Fire Disaster:

Cyclone and Fire Disaster Cyclone occurrence and hazards. Cyclone resistant house for coastal areas. Disaster resistant construction role of insurance sector. Types of fire. Fire safety and firefighting method, fire detectors, fire extinguishers. Rehabilitation: Rehabilitation programmes, Management of Relief Camp.

Text Books

1. Disaster Management, RB Singh (Ed), Rawat Publications. (ISBN: 13-978-8131600337).
2. Disaster Management Future Challenges and Opportunities, Jagbir Singh, I.K International publishing house. (ISBN: 13-978-8189866464).

Reference Books:

1. Natural Hazards in the Urban habitat by Iyengar, CBRI, Tata McGraw Hill. (ISBN:13-9780074631881).
2. Natural Disaster management, Jon Ingleton (Ed), Tulor Rose. (ISBN:13-978-0953614011).
3. Anthropology of Disaster management, Sachindra Narayan, Gyan Publishing house. (ISBN: 13-978-8121206839).

Web Links:

1. https://www.iare.ac.in/sites/default/files/lecture_notes/dm%20notes.pdf

Waste Water Management

(EEE,ME,ECE,CSE,IT,AIML,CSE(DS), PT, Min.E.)

Course Code: 2501CE81

L	T	P	C
3	0	0	3

Course Outcomes:
At the end of the course, student will be able to:

CO1: Explain the importance of sanitation and wastewater management.
CO2: Explain the various methods of sewage flow estimation and pumping systems.
CO3: Identify the various characteristics of sewage and the treatment system.
CO4: Outline the various secondary treatment technologies for waste water
CO5: Explain the different tertiary and effluent disposal methods.

Mapping of Course Outcomes with Program Outcomes:

CO/PO	PO 1	PO 2	PO 3	PO 4	PO 5	PO 6	PO 7	PO 8	PO 9	PO 10	PO 11
CO1	2	3									
CO2	2	3				1					
CO3	3	3	1			2					
CO4	2	2	1	2		2					
CO5	2	2	1			2					

UNIT – I
Introduction:
Introduction to sanitation–systems of sanitation–relative merits and demerits –need for waste water management–basic terminology in waste water–generation of waste water–types – collection and conveyance of waste water– classification of sewerage systems.

UNIT – II
Sewage Flow and Pumping:
Estimation of sewage flow and storm water drainage–fluctuations. Types of sewers–hydraulics of sewers– appurtenances in sewerage. Pumping of waste water:pumping stations–location–components– typesofpumpsand their suitability with regards to waste waters.

UNIT – IV
Secondary Treatment:
Aerobic and anaerobic treatment process-comparison. Aerobic units: Activated sludge process, principles, modifications of activated sludge processes–Oxidation ponds–Trickling filters– Rotating biological contactors. Anaerobic units: UASB Reactor, principle and working.

UNIT – V
Tertiary Treatment and Disposal:
Removal of Nutrients–Nitrification and Denitrification–Ion exchange–membrane processes –MF, UF, NF, RO. Disposal of sewage–Methods of disposal–Effluent Standards. Need, Scope and demand for waste water recycling.

Text Books:

1. Wastewater Engineering: Treatment and Resource Recovery, Metcalf & Eddy, McGraw-Hill, New York, 5th Edition. (ISBN: 13-978-0073401188).
2. Wastewater Engineering Treatment and Reuse, Metcalf & Eddy, Tata McGraw-Hill , 2018. (ISBN: 13-978-0070495395).

Reference Books:

1. Environmental Engineering-II: Sewage disposal and Air pollution Engineering, Garg & S.K., Khanna Publications. (ISBN:978-81-7409-230-4)
2. Environmental Engineering by D. Srinivasan, PHI Learning private Limited, New Delhi. (ISBN:13-9788120336001)
3. Elements of Environmental Engineering, K.N. Duggal, S.Chand& Company Ltd. New Delhi. (ISBN: 13-978-8121915472).
4. Wastewater Treatment for pollution control and Reuse, Soli J Areivala, Sham R Asolekar, Mc- GrawHill, New Delhi. (ISBN:9780070620995).

Web Links:

1. https://web.iitd.ac.in/~arunku/files/CVL100_Y16/LecSep1220.pdf
2. http://www.civil.iitm.ac.in/dwwm/sites/default/files/presentations
3. https://www.researchgate.net/publication/221911472_Wastewater_Management

Integrated Solid Waste Management for A Smart City

(EEE,ME,ECE,CSE,IT,AIML,CSE(DS), PT, Min.E.)

Course Code: 2501CE82

L	T	P	C
3	0	0	3

Course Outcomes:
At the end of the course, student will be able to:

CO1: Understand Fundamental Concepts of Solid Waste Management
CO2: Analyze Municipal Solid Waste Management Practices
CO3: Evaluate Disposal Methods and Technologies
CO4: Apply Knowledge of Construction and Demolition (C&D) Waste Management
CO5: Examine E-Waste and Hazardous Waste Management

Mapping of Course Outcomes with Program Outcomes:

CO/PO	PO 1	PO 2	PO 3	PO 4	PO 5	PO 6	PO 7	PO 8	PO 9	PO10	PO 11
CO1	1					3	2				
CO2	1					3	2				
CO3	1					3	2				
CO4	1					3	2				
CO5	1					3	2				

UNIT – I
Introduction:
Solid Waste Management- Definition, Concept of 4Rs (reduce, reuse, recycle and recover) of waste management, Elements of a waste management system, Issues in Solid Waste Management, Integrated Waste Management Hierarchy: Source reduction, Recycling, Waste-to-Energy and Landfilling, Review of waste management under Swachh Bharat Mission and Smart Cities Program.

UNIT – II
Municipal Solid Waste:
Waste Composition and Quantities, Collection, Transportation, Segregation, and Processing.

UNIT – III
Disposal of Municipal Solid Waste:
Landfill, Biochemical Processes and Composting, Energy Recovery from Municipal Solid Waste, Municipal Solid Waste (MSW) Rules 2016, Current Issues in Solid Waste Management and Review of MSW Management

UNIT – IV
Construction and Demolition (C&D) Waste Management:
Overview, Components; C&D Waste Management Rules 2016, Beneficial Reuse of C & D Waste Materials.

UNIT – V
Electronic Waste (E-Waste) Management:
Issues and Status in India and Globally, E-Waste Management Rules 2016 and Management Challenges.

Hazardous Wastes:
Definition, Classification, Risk assessment, Transportation of hazardous waste, Current Management Practices: Environmental audit, Containment, Remedial alternatives.

Text Books:
1. Solid Waste Engineering, William A Worrell and P. AarneVeslind, Cengage Learning, 2nd Edition(SI Edition). (ISBN: 13-978-8131520420).
2. Integrated Solid Waste management, George Tchobanoglous, Hilary Theisen and Samuel A Vigil, Tata McGraw Hill. (ISBN: 13-978-0070632370).

Reference Books:
1. Manual on Solid Waste Management, prepared by The Central Public Health and Environmental Engineering Organization (CPHEEO), India.
2. MSW Management Rules 2016, Govt. of India, available online at CPCB website
3. Construction and Demolition Waste Management Rules, 2016, MoEF&CC
4. Electronic Waste Management Rules 2016, Govt. of India, available online at CPCB website.

Web Links:
1. https://nptel.ac.in/courses/105/105/105105160/
2. http://swachhbharatmission.gov.in/sbmcms/index.html
3. http://swachhbharaturban.gov.in/

Watershed Management

(EEE,ME,ECE,CSE,IT,AIML,CSE(DS), PT, Min.E.)

Course Code: 2501CE83

L	T	P	C
3	0	0	3

Course Outcomes:

At the end of the course, student will be able to:

CO1: Explain the objectives and characteristics of watershed management.
CO2: Classify the types of soil erosion and control methods.
CO3: Explain different water harvesting techniques.
CO4: Organize the land and drought management techniques.
CO5: Create hydrological models

Mapping of Course Outcomes with Program Outcomes:

CO/PO	PO 1	PO 2	PO 3	PO 4	PO 5	PO 6	PO 7	PO 8	PO 9	PO 10	PO 11
CO1	2			2	1	1		1		2	
CO2	1			1	1	1					
CO3	2	1		1	2	2					
CO4	2	1	1	2	1	2		1		2	
CO5	2	2	2	1	2	1					

UNIT – I

Introduction:

Introduction - Concept of watershed development – objectives of watershed development – need for watershed development - integrated and multidisciplinary approach for watershed management. Characteristics of Watershed: Size – shape – physiography – slope – climate – drainage – land use – vegetation – geology and soils – hydrology and hydrogeology – socio-economic characteristics – Application of artificial intelligence technology for identification of watershed characteristics.

UNIT – II

Principles of Erosion: Types and causes of erosion – factors affecting erosion– estimation of soil loss due to erosion- Universal soil loss equation. Measures to Control Erosion: Contour techniques – ploughing – furrowing – trenching – bunding – terracing – gully control – check dams – rock-fill dams – brushwood dam – Gabion.

UNIT – III

Water Harvesting: Techniques of rainwater harvesting – rainwater harvesting from rooftop – surface flow harvesting – subsurface flow harvesting – stop dams – farm ponds and dugout ponds – percolation tanks.

UNIT – IV

Land Management: Land use and Land capability classification – management of forest – agricultural – grassland and wild land land grading operation –reclamation of saline and alkaline soils. Drought Management: Drought assessment and classification – drought analysis techniques – drought mitigation planning.

UNIT – V

Beyond BIM - Emerging Trends

Watershed Modelling: Data of watershed for modelling – application and comparison of watershed models – model calibration and validation – advances of watershed models.

Text Books:

1. Watershed Management, Das MM and M.D Saikia, PHI Learning Pvt. Ltd.(ISBN:13-978-8120346765).
2. Land and Water Management, Murthy.VVN, Kalyani Publications. (ISBN: 13-978-9327214659)

Reference Books:

1. Water Resource Engineering, Wurbs R A and James R A, Prentice Hall Publishers. (ISBN: 13-978-8120321519).
2. Watershed Hydrology, Black P E, Prentice Hall. (ISBN: 13-978-1575040271).
3. Watershed Management, Murthy J V S, New Age International Publishers. (ISBN:13-978-8122435184).

Web Links:

1. https://www.ct.gov/deep/cwp/view.asp?a=2719&q=325622&depNav_GID=1654
2. http://agritech.tnau.ac.in/agriculture/agri_majorareas_watershed_watershedmgt.html
3. https://yourstory.com/2017/11/watershed-management/

Electric Power Generation, Transmission & Distribution Systems

(CE,ME,ECE,CSE,IT,AIML,CSE(DS), PT, Min.E.)

Course Code: 2501EE53

L	T	P	C
3	0	0	3

Course Outcomes:

At the end of the course, student will be able to:

CO1: Identify the different components of various power plants.

CO2: Analyze the performance of short, medium and long transmission lines.

CO3: Identify various factors related to sag and corona.

CO4: Distinguish between AC/ DC distribution systems and also estimate voltage drops of distribution systems.

CO5: Analyze the different economic factors of power generation and tariffs.

Mapping of Course Outcomes with Program Outcomes:

CO/PO	PO 1	PO 2	PO 3	PO 4	PO 5	PO 6	PO 7	PO 8	PO 9	PO10	PO 11
CO1	3	1	-	-	-	2	-	-	-	-	-
CO2	2	3	1	-	-	-	-	-	-	-	-
CO3	2	1	3	-	-	1	-	-	-	-	-
CO4	2	3	1	-	-	1	-	-	-	-	-
CO5	2	3	1	-	-	-	-	-	-	-	-

UNIT – I

Power Stations: Principle of power generation, site selection and layout of Thermal, Nuclear, Hydro power plant, Components of Thermal and Nuclear power plant

UNIT – II

Performance of Transmission Lines: Classification of Transmission Lines –Short, medium, long and their model representations –End condenser method, Nominal-T–Nominal-Pie, and A, B, C, D Constants, Surge Impedance and SIL of Long Lines.

UNIT – III

Corona and Sag: Corona – Description of the phenomenon–Factors affecting corona–Critical voltages and power loss –Radio Interference. Sag and Tension calculations with equal and unequal heights of towers–Effect of Wind and Ice on weight of Conductor

UNIT – IV

Distribution Systems: Classification of distribution systems, design features of distribution systems, radial distribution, ring main distribution, voltage drop calculations: DC distributors for following cases - radial DC distributor fed at one end and at both ends (equal / unequal voltages), ring main distributor, stepped distributor and AC distribution, comparison of DC and AC distribution.

UNIT – V

Economic Aspects of Power Generation and Tariff Methods: Types of load, Load curve, load duration and integrated load duration curves, Important terms and factors in Load Curve. Costs of Generation and their division into Fixed, Semi-fixed and Running Costs, Characteristics and types of Tariff.

Text Books:

1. A Text Book on Power System Engineering by M. L. Soni, P. V. Gupta, U. S. Bhatnagar &, A. Chakrabarti, Dhanpat Rai & Co. Pvt. Ltd (ISBN: 978817700207).
2. Generation, Distribution & Utilization of Electric Energy by C. L. Wadhawa, Newage International (P) Limited, Publishers (ISBN: 9789393159175).

Reference Books:

1. Principles of Power System by V. K. Mehta & Rohit Mehta, S Chand & Company Limited, Publishers (ISBN: 9788121924962).
2. Electrical Power Distribution Systems by V. Kamaraju, Tata McGraw Hill, New Delhi (ISBN: 978070151413).

Web Links:

1. https://www.slideshare.net/ntpc-project-korbasuper-themal-power-plant
2. https://www.euronuclear.org/1-information/energy-uses.html
3. https://www.slideshare.net/9anku/electrical-distribution-system

Electric Energy Storage Systems

(CE,ME,ECE,CSE,IT,AIML,CSE(DS), PT, Min.E.)

	L	T	P	C
Course Code:2501EE36	3	0	0	3

Course Outcomes:

At the end of the course, student will be able to:

CO1 Analyze the characteristics of electrical energy storage technologies.
CO2 Analyze the needs for electrical energy storage.
CO3 Analyze the needs for electrical energy storage.
CO4 Underst& the various types of electrical energy storage systems.
CO5 Identify various real time applications of energy storage systems.

Mapping of Course Outcomes with Program Outcomes:

CO/PO	PO 1	PO 2	PO 3	PO 4	PO 5	PO 6	PO 7	PO 8	PO 9	PO 10	PO 11
CO1	2	3	1	-	-	-	-	-	-	-	-
CO2	3	2	1	-	-	-	-	-	-	-	-
CO3	2	1	3	-	-	-	-	-	-	-	-
CO4	3	1	1	-	-	-	-	-	-	-	-
CO5	3	2	2	-	-	-	-	-	-	-	-

UNIT – I

Electrical Energy Storage (EES) Technologies: Characteristics of electricity, Electricity & the roles of EES, High generation cost during peak-dem& periods, Need for continuous & flexible supply, Long distance between generation & consumption, Congestion in power grids, Transmission by cable.

UNIT – II

Needs for Electrical Energy Storage: Emerging needs for EES, More renewable energy, less fossil fuel, Smart Grid uses, The roles of electrical energy storage technologies, The roles from the viewpoint of a utility, The roles from the viewpoint of consumers, The roles from the viewpoint of generators of renewable energy.

UNIT – III

Features of Energy Storage Systems: Classification of EES systems , Mechanical storage systems, Pumped hydro storage (PHS), Compressed air energy storage (CAES), Flywheel energy storage (FES), Electrochemical storage systems, Secondary batteries, Flow batteries, Chemical energy storage, Hydrogen (H2),Synthetic natural gas (SNG).

UNIT – IV

Types of Electrical Energy Storage systems: Electrical storage systems, Double-layer capacitors (DLC), Superconducting magnetic energy storage (SMES), Thermal storage systems, St&ards for EES, Technical comparison of EES technologies.

UNIT – V

Applications: Present status of applications, Utility use (conventional power generation, grid operation & service), Consumer use (uninterruptable power supply for large consumers), New trends in applications, Renewable energy generation, Smart Grid, Smart Micro grid, Smart House, Electric vehicles, Management & control hierarchy of storage systems, Internal configuration of battery storage systems, External connection of EES systems, Aggregating EES systems & distributed generation (Virtual Power Plant), Battery SCADA aggregation of many dispersed batteries.

Text Books:

1. Energy Storage Benefits & Market Analysis, by James M. Eyer, Joseph J. Iannucci & Garth P. Corey Sandia National Laboratories.
2. The Electrical Energy Storage by IEC Market Strategy Board.

Reference Boks:

1. Energy Storage for the Electricity Grid: Benefits & Market Potential Assessment Guide, Jim Eyer, Garth Corey, Sandia National Laboratories.
2. Energy Storage by Mullick & Garg (ISBN: 9789027719300)

Web Links:

1. https://nptel.ac.in/courses/112/105/112105221/
2. https://nptel.ac.in/courses/112/107/112107283/
3. https://nptel.ac.in/content/storage2/courses/10810309

Electrical Safety

(CE,ME,ECE,CSE,IT,AIML,CSE(DS), PT, Min.E.)

	L	T	P	C
Course Code: 2501EE43	**3**	**0**	**0**	**3**

Course Outcomes:
At the end of the Course, Student will be able to:

CO 1: Describe electrical hazards & safety equipment.
CO 2: Analyze & apply various grounding & bonding techniques
CO 3: Select appropriate safety method for low, medium equipment's & high voltage equipment.
CO 4: Participate in a safety team & Carry out proper maintenance of electrical equipment by understand&ing various St&ards.
CO 5: Analyze the safety method for high voltage equipment's.

Mapping of course outcomes with program outcomes:

CO/PO	PO1	PO2	PO3	PO4	PO5	PO6	PO7	PO8	PO9	PO10	PO11
CO1	3	2	1	-	-	-	-	-	-	-	-
CO2	3	2	1	-	-	-	-	-	-	-	-
CO3	3	2	1	-	-	-	-	-	-	-	-
CO4	3	2	2	-	-	-	-	-	-	-	-
CO5	1	3	1	-	-	-	-	-	-	-	-

UNIT-I:
Hazards of Electricity & Electrical Safety Equipment: Primary & secondary hazards- arc, blast, shocks causes & effects-safety equipment flash & thermal protection, head & eye protection-rubber insulating equipment, hot sticks, insulated tools, barriers & signs, safety tags, locking devices-voltage measuring instruments- proximity & contact testers-safety electrical one line diagram-electrician's safety kit.

UNIT-II:
Grounding of Electrical Systems & Equipment: General requirements for grounding & bonding-definitions grounding of electrical equipment-bonding of electrically conducting materials & other equipment connection of grounding & bonding equipment- system grounding- purpose of system grounding-grounding electrode system- grounding conductor connection to electrodes-use of grounded circuit conductor for grounding equipment- grounding of low voltage & high voltage systems.

UNIT-III:

Safety Procedures & Methods: The six step safety methods- pre job briefings - hot-work decision tree-safe switching of power system- lockout-tag out- flash hazard calculation & approach distances-calculating the required level of arc protection-safety equipment, procedure for low, medium & high voltage systems- the one-minute safety audit

UNIT-IV:

Safety Management & Organizing Structure: Electrical safety program structure, development-company safety team- safety policy program implementation- employee electrical safety teams-safety meetings- safety audit accident prevention- first aid- rescue techniques-accident investigation.

UNIT-V:

Electrical Maintenance & Legal Safety Requirements & St&ards: Safety related case for electrical maintenance- reliability centred maintenance (RCM) - eight step maintenance program-frequency of maintenance- maintenance requirement for specific equipment & location- regulatory bodies- national electrical safety code st&ard for electrical safety in work place- occupational safety & health administration st&ards, Indian Electricity Acts related to Electrical Safety

Text Books:

1. 'Electrical Safety Handbook' by John Cadick, Mary Capelli-Schellpfeffer, Dennis Neitzel, Al Winfield, McGraw-Hill Education, 4th Edition (ISBN: 978071745130)
2. "Electric Safety Practice & Standards", Khaled Ismail, CRC Press, Taylor & Francis (ISBN: 9781138073999).

Reference Books

1. 'Electrical Safety- a guide to the causes & prevention of electric hazards', Maxwell Adams.J, The Institution of Electric Engineers, IET (ISBN: 9780852968062).
2. 'Electrical Safety in the Workplace', Ray A. Jones, Jane G. Jones, Jones & Bartlett Learning (ISBN: 9780877655800).

Web Links:

1. http://nptel.ac.in/courses/103106071/5
2. https://www.electricalsafetyfirst.org.uk

Hybrid & Electric Vehicles

(CE,ECE,CSE,IT,AIML,CSE(DS), PT, Min.E.)

	L	T	P	C
Course Code:2501EE54	**3**	**0**	**0**	**3**

Course Outcomes:
At the end of the Course, Student will be able to:

CO1: Describe the History of Hybrid Electric vehicles
CO2: Classify the various electric drivetrain topologies
CO3: Articulate the Energy Storage Requirements in Hybrid & Electric Vehicles
CO4: Illustrate the Charging Infrastructure
CO5: Evaluate Energy Management Strategies used in hybrid & electric vehicle

Mapping of Course Outcomes with Program Outcomes:

CO/PO	PO1	PO2	PO3	PO4	PO5	PO6	PO7	PO8	PO9	PO10	PO11
CO1	1	-	1	-	-	1	-	-	-	-	1
CO2	1	1	1	-	1	1	-	-	-	-	1
CO3	3	2	3	2	2	2	-	-	-	-	1
CO4	2	1	2	1	1	2	-	-	-	-	1
CO5	3	3	3	3	3	2	-	-	-	-	1

UNIT – I
Introduction:
Introduction to Hybrid Electric Vehicles: History of hybrid & electric vehicles, social & environmental importance of hybrid & electric vehicles, impact of modern drive-trains on energy supplies-Challenges & Key Technologies of EVs – Challenges for EV Industry in India

UNIT – II
Electric Drive-trains:
Basic concept of electric traction - introduction to various electric drivetrain topologies - Power flow control in electric drive-train topologies - fuel efficiency analysis
Electric Propulsion unit:
Introduction to electric components used in hybrid and electric vehicles, configuration and control of DC Motor drives, configuration and control of Induction Motor drives, configuration and control of permanent magnet motor drives, configuration and control of switch reluctance motor drives, drive system efficiency

UNIT – III
Energy Storage:
Introduction to Energy Storage Requirements in Hybrid & Electric Vehicles -Battery based energy storage & its analysis - Fuel Cell based energy storage & its analysis - Super Capacitor based energy storage- Flywheel based energy storage & its analysis.

UNIT – IV

Sizing the drive system:

Matching the electric machine and the internal combustion engine (ICE), Sizing the propulsion motor, sizing the power electronics, selecting the energy storage technology, Communications, supporting subsystems.

UNIT – V

Energy Management Strategies

Introduction to Energy Management Strategies used in hybrid & electric vehicle, Classification of different Energy Management strategies - Comparison of different Energy Management Strategies - Implementation issues of energy strategies - Effect of charging infrastructure on grid protection & control.

Text Books:

1. Electric Vehicle Technology Explained, James Larminie, John Lowry, Wiley-Blackwell (ISBN: 9781119942733).

2. Energy Management Strategies for Electric & Plug-in Hybrid Electric Vehicles, Sheldon S. Williamson, Springer (ISBN: 9781493955237).

Reference Books:

1. Electric Vehicle Battery Systems, Sandeep Dhameja, Elsevier (ISBN: 9780750699167).
2. Advanced Electric Drive Vehicles, Ali Emadi, CRC Press (ISBN: 9781138072855).
3. Hybrid electric Vehicles Principles & applications with practical perspectives, Chris Mi,M. Abul Masrur, D. Wenzhong Gao, A Dearborn, John Wiley & Sons Ltd (ISBN: 9781118970560).

Solar Energy Systems

(CE,EEE,ECE,CSE,IT,AIML,CSE(DS), PT, Min.E.)

Course Code: 2501ME37

L	T	P	C
3	0	0	3

Course Outcomes:

At the end of the course, student will be able to:

CO1: Explain the concept of solar radiation and its measurement
CO2: Describe the working principle of different types of collectors and its types
CO3: Explain the various solar thermal energy technologies and their applications
CO4: Analyze the various solar PV cell materials and conversion techniques.
CO5: Apply solar passive building techniques for cooling and heating applications.

Mapping of Course Outcomes with Program Outcomes:

CO/PO	PO 1	PO 2	PO 3	PO 4	PO 5	PO 6	PO 7	PO 8	PO 9	PO 10	PO 11
CO1	2	1	-	-	-	3	-	-	-	-	-
CO2	2	1	-	-	-	3	-	-	-	-	-
CO3	2	1	-	-	-	3	-	-	-	-	-
CO4	2	1	-	-	-	3	-	-	-	-	-
CO5	2	1	-	-	-	3	-	-	-	-	-

UNIT – I

Solar Radiation and its measurement: Solar angles, Sun path diagrams, Radiation, extra terrestrial characteristics, Solar energy measuring instruments: Pyranometer, Pyrheliometer, Sunshine recorder. Estimation of average solar radiation and estimation on horizontal and tilted surfaces

UNIT – II

Solar Collectors for Industrial process heat: Flat plate collector, Materials for flat plate collector and their properties, classification, evacuated tubular collectors, concentrator collectors, tracking systems, compound parabolic concentrators, parabolic trough concentrators, concentrators with point focus, Heliostats.

UNIT – III

Solar Thermal Technologies: Working principle, types, design, and operation, Solar heating and cooling systems, Thermal Energy storage systems, Solar Desalination, Solar cooker, Solar Pond, Solar drying, Solar chimney, Solar water disinfection (SODIS), Solar furnaces.

UNIT – IV

Solar Cells: Semiconductor materials, Doping, PN junction and characteristics, Photovoltaic effect, Photovoltaic material, Parameters of solar cells, Effects of cell temperature on cell efficiency, Types of solar cells, Solar modules and arrays, Solar cell power plant, Silicon, thin film and polymer processing, Silicon wafer based solar cells, Hybrid organic- inorganic solar cells.

UNIT – V

Solar Passive Architecture: Thermal comfort, bioclimatic classification. Passive heating concepts: direct heat gain, indirect heat gain, isolated gain and sunspaces

Passive cooling concepts: evaporative cooling, Radiative cooling, shading - paints and cavity walls for cooling, roof radiation traps, thermal comfort.

Text Books:

1. Solar Energy-Principles of Thermal Collection and Storage, S P Sukhatme & J K Nayak, McGraw Hill Education, 3rd Edition,2009, ISBN : 9780070142961.
2. Principles of Solar Engineering, D.Yogi Goswami, Frank Krieth and Jan F. Kreider Taylor and Francis, 2nd Edition,2000, ISBN : 9781560327141.

Reference Books:

1. Solar Energy- Fundamentals, Design, Modelling and Applications, G.N.Tiwari, Narosa publishing house. 1st Edition, 2002, ISBN : 9780849325093.
2. Solar Energy and Non-conventional Energy Sources, Domkundwar, Dhanpat Rai & Co, (P) Ltd., 2nd Edition, ASIN : B0BQWR83GF

Web Links:

1. https://archive.nptel.ac.in/courses/115/103/115103123/
2. https://www.nrel.gov/research/re-solar.html

Industry 5.0 for Engineers

(CE,EEE,ECE,CSE,IT,AIML,CSE(DS), PT, Min.E.)

Course Code: 2501ME58	**L**	**T**	**P**	**C**
	3	**0**	**0**	**3**

Course Outcomes:
At the end of the course, student will be able to:

CO1: Explain the basic concept of Industry 5.0.

CO2: Explain the concepts of Industrial IOT, IOS and Predictive Analytics

CO3: Explain the cyber physical systems and AI technologies

CO4: Analyse the applications of Industry 5.0 in various sectors

CO5: Analyse case studies on automation and healthcare services

Mapping of Course Outcomes with Program Outcomes:

CO/PO	PO 1	PO 2	PO 3	PO 4	PO 5	PO 6	PO 7	PO 8	PO 9	PO 10	PO 11
CO1	1	-	-	-	-	-	-	-	-	-	-
CO2	1	1	1	-	2	-	-	-	-	-	-
CO3	1	1	1	-	2	-	-	-	-	-	-
CO4	1	3	1	-	2	-	-	-	-	-	-
CO5	1	3	1	-	2	-	-	-	-	-	-

UNIT – I

Introduction to Industry 5.0: Introduction of Various Industrial Revolutions, Digitalisation and the Networked Economy, Drivers, Enablers, Compelling Forces and Challenges for Industry 5.0, Comparison of Industry 5.0 Factory and Today's Factory, Trends of Industrial Big Data and Predictive Analytics for Smart Business Automation and Transformation Processes.

UNIT – II

Importance of Internet of Things (IOTs): Introduction to Internet of Things (IoT), Industrial Internet of Things (IIoT), Internet of Services, Fundamental of Predictive Analytics, Smart Logistics, Smart Devices and Products.

UNIT – III

Technology Evolution: Basics of cyber Physical Systems, Process Automations and Collaborative robots, Fundamental to artificial Intelligence, Mobile Computing, Cyber Security, Ethical technology, Responsive and distributed supply chain system, Human-centric and Value-oriented approaches.

UNIT – IV

Technology Implementation and Case Studies: 3D printing, Solar energy sector, Healthcare sector, Maintain records related to education, finance, clean bioenergy generation and Intelligent NextG Wireless Networks.

UNIT – V

Case studies on CNC/NC automation - Benefits, challenges, and industry applications. In-house, Healthcare services-Examples of innovations improving patient care and operational efficiency.

Text Books:

1. Uthayan Elangovan, Industry 5.0, "The Future of the Industrial Economy", First Edition, Taylor & Francis, ISBN: 978-1-032-04127-8, 2022.
2. Alessandro Massaro, "Electronics in Advanced Research Industries: Industry 4.0 to Industry 5.0 Advances", Wiley-IEEE Press, 2021, ISBN: 2021028944.

Reference Books:

1. Alasdair Gilchrist, "Industry 4.0: The Industrial Internet of Things", Apress, 2016.
2. Lan Gibson, David W. Rosen and Brent Stucker, "Additive Manufacturing Technologies Rapid Prototyping to Direct Digital Manufacturing", Springer, 2010.
3. Hans Bernhard Kief, Helmut Roschiwal, Karsten Schwarz, "The CNC Handbook: Digital Manufacturing and Automation from CNC to Industry 4.0", Industrial Press Inc., U.S. ISBN 0831136367, Nov 2021.
4. Janya Chanchaichujit, Albert Tan, Fanwen Meng, Sarayoot Eaimkhong, "Healthcare 4.0 Next Generation Processes with the Latest Technologies", Palgrave Pivot, 2019,ISBN978-981-13-8113-3.

Web Links:

1. http://www.mqtt.org/
2. https://opcfoundation.org/about/opc-technologies/opc-ua/
3. https://www.ethercat.org/default.htm

Organizational Behaviour

(CE,EEE,ECE,CSE,IT,AIML,CSE(DS), PT, Min.E.)

Course Code: 2501ME73

L	P	T	C
3	0	0	3

Course Outcomes:

At the end of the course, student will be able to:

CO1: Explain the roles, approaches of organizational behaviour models.

CO2: Summarize the behaviour of individuals and groups in organizations in terms of organizational behaviour.

CO3: Illustrate various stress and emotional organizational behaviour concepts, models and theories to real life management situations.

CO4: Analyze the functions of organizational communication and culture for effective communication and managing cultural diversity

CO5: Organize different groups and teams in the organization for better results.

Mapping of Course Outcomes with Program Outcomes:

CO/PO	PO 1	PO 2	PO 3	PO 4	PO 5	PO 6	PO 7	PO 8	PO 9	PO 10	PO 11
CO1	-	-	-	-	-	-	1	3	2	-	-
CO2	-	-	-	-	-	-	1	3	2	-	-
CO3	-	-	-	-	-	-	1	2	3	-	-
CO4	-	-	-	-	-	-	1	2	3	-	-
CO5	-	-	-	-	-	-	1	3	2	-	-

UNIT – I

Organizational Behaviour: Concept of Organizational Behaviour (OB)- Importance of Organizational Behaviour- Key Elements of Organizational Behaviour, Role of Managers in OB- Interpersonal Roles-Informational Roles- Decisional Roles, Approaches to Organizational Behaviour

UNIT – II

Interpersonal Behaviour: Nature and meaning of Interpersonal Behaviour, Concept of Self, Transaction Analysis (TA), Benefits and uses of Transactional Analysis, Johari Window Model

Personality: Definition and Meaning of Personality - Importance of Personality, Determinants of Personality, Theories of Personality, Personality Traits Influencing OB.

UNIT – III

Emotions: Nature and Meaning of Emotions - Characteristics of Emotions, Theories of Emotions, Emotions in the Context of OB. Organizational Stress: Definition and Meaning, Sources of Stress, Types of Stress, Impact of Stress on Organizations, Stress Management Techniques.

UNIT – IV

Organizational Communication: Meaning and Importance of Communication, Functions, process, types, Interpersonal Communication, Organizational Communication, Tips for Effective Communication.

Organization Culture: Meaning and Nature of Organization Culture – Origin of Organization Culture, Functions of Organization Culture, Types of Culture, Creating and Maintaining Organization Culture, Managing Cultural Diversity

UNIT – V

Groups and Teams: Meaning and Importance of Groups, Reasons for Group Formation, Types of Groups, Stages of Group Development, Meaning and Importance of Teams, Types of Teams, Creating an Effective Team.

Text Books:

1. Organizational Behaviour, K. Ashwathappa, Himalaya Publishing House, ISBN-13. 978-8184889390.
2. Management and Organizational Behaviour - (Text and Cases), Dr.P.Subba Rao and Prof. N.Sambasiva Rao, Himalaya Publishing House, Mumbai, ISBN: 978-93-5025-951-2.

Reference Books:

1. Understanding Organisational Behaviour, Udai Pareek, Oxford Higher Education, 2nd Edition, ISBN-13: 978-0195690866
2. Mc Shane & Von Glinov, Organisational Behaviour, Tata McGraw Hill, 4th Edition, ISBN-13, 978-1259927676.

Web Links:

1. https://onlinecourses.nptel.ac.in/noc20_mg51/preview
2. https://www.udemy.com/course/organisational-behaviour/

Sustainable Energy Systems

(CE,EEE,ECE,CSE,IT,AIML,CSE(DS), PT, Min.E.)

Course Code: 2501ME36

L	T	P	C
3	0	0	3

Course Outcomes:

At the end of the course, student will be able to:

CO1: Demonstrate the various components of solar thermal energy systems.
CO2: Describe the working of Wind turbines.
CO3: Explain the principle and working of Biomass and Geothermal Energy systems
CO4: Explain the Ocean, Tidal, Wave and hydro energy conversion systems.
CO5: Illustrate working of hybrid energy systems.

Mapping of Course Outcomes with Program Outcomes:

CO/PO	PO 1	PO 2	PO 3	PO 4	PO 5	PO 6	PO 7	PO 8	PO 9	PO 10	PO 11
CO1	2	-	-	-	-	3	-	-	-	-	-
CO2	2	-	-	-	-	3	-	-	-	-	-
CO3	2	-	-	-	-	3	-	-	-	-	-
CO4	2	-	-	-	-	3	-	-	-	-	-
CO5	2	-	-	-	-	3	-	-	-	-	-

UNIT – I

Introduction to Renewable energy sources: Energy demand and availability, energy crisis, renewable and non-renewable energy resources, environmental impact of conventional energy usage.

Solar Energy: Overview of the fundamental physics of solar radiation. Solar energy collectors.

Solar energy storage: Stratified storage, well mixed storage, comparison, Hot water system, solar ponds, non-convective solar pond, extraction of thermal energy and application of solar ponds.

Solar PV systems and its applications. Solar cell, module, and array.

UNIT – II

Wind Energy: Wind data and energy estimation – Betz limit - Site selection for windfarms. Horizontal and vertical axis wind mills, Wind farms- offshore, Onshore, various methods of control, and Environmental issues – Applications.

UNIT – III

Biomass: Bio-resources, Conversion process, Biomass gasifier - Types of biomass gasifiers, Biodiesel production – Ethanol production -Applications.

Geothermal Energy: Origin and types of geothermal energy and utilisation, Power generation from Geothermal energy, Environmental impact.

UNIT – IV

Ocean, Wave & Tidal Energy: Introduction - Resource Assessment - Power generation through OTEC systems. Wave and Tidal energy- Working principle, Availability, and energy conversion systems.

Mini & Micro Hydropower: Introduction, Power from water, System components of Mini and Micro Hydropower, Micro Hydropower plant in India, Potential Hydropower plant projects identified in India.

UNIT – V

Hybrid Energy Systems: Systems for processes and power applications – solar – wind – Biomass hybrid technologies

Fuel cell: Working principle- types - construction and applications. Solar – Fuel cell hybrid systems.

Text Books:

1. Renewable Energy: Power for a Sustainable Future, Boyle, G, Oxford University Press, 3rd Edition,2012, ISBN : 9780199681273.
2. Non-Conventional Energy Sources, G.D.Rai, Khanna Publishers, 6th edition, ISBN : 9788174090737.

Reference Books:

1. Renewable Energy Resources, John Twidell, Tony Weir, and Anthony D. Weir,Taylor & Francis,3rd edition,2015, ISBN : 9780415584388.
2. Non-Conventional Energy Resources, B H Khan, TMH Publishers, 3rd Edition,2017, ISBN : 9789352601882.

Web Links:

1. https://onlinecourses.nptel.ac.in/noc22_ch27/preview
2. https://www.energy.gov/eere/renewable-energy

Biomedical Electronics

(CE,EEE,ME,CSE,IT,DS,AIML,PT,Min.E, Ag.E)

Course Code: 2501EC97

L	T	P	C
3	0	0	3

Course Outcomes: At the end of the course, students will be able to:

CO1: Understand the basic medical instrumentation system and bioelectric potentials.
CO2: Illustrate different types of electrodes to acquire bio-signals.
CO3: Demonstrate clinical laboratory measurements and assistive devices.
CO4: Discuss the latest developments in medical imaging systems.
CO5: Outline patient care and safety while using biomedical equipment.

Mapping of Course Outcomes with Program Outcomes:

CO/PO	PO 1	PO 2	PO 3	PO 4	PO 5	PO 6	PO 7	PO 8	PO 9	PO 10	PO 11
CO1	3	2			1						
CO2	3	3	1	2	2						
CO3	3	3	2	2	2						
CO4	3	2	2	2	3						
CO5	3	3	1	2	2						

Mapping of Course Outcomes with Program Specific Outcomes:

CO/PSO	PSO1	PSO2
CO1	2	
CO2	2	
CO3	2	
CO4	2	
CO5	2	

UNIT – I

Components of Medical Instrumentation Systems

Basic Medical Instrumentation System, Static and dynamic characteristics of medical instruments, Bio-signals and characteristics. Problems encountered with measurements from human beings. Sources of Bioelectric Potentials, Resting and Action Potentials.

UNIT – II

Bio-Potential Electrodes and Physiological Transducers:

Electrode potential and its equivalent circuit, Types of Electrodes: Surface Electrodes, Needle Electrodes, Micro Electrodes. Biochemical Transducers.

Bio-Signal Acquisition:

Electrical Conduction system of the heart, Electrocardiogram, ECG leads, Einthoven triangle, Plethysmography, EEG 10-20 lead system and EMG. basics of biomedical signal acquisition, common signal artifacts and simple noise reduction techniques.

UNIT – III

Clinical laboratory Measurements:

Blood cell Counter, Blood flow meters- Electromagnetic blood flow meter, Ultrasonic Doppler blood flow meter, automated blood pressure measurements.

Physiological Assist Devices & Therapeutic Equipment:

Pacemakers - External & internal, Defibrillators- External & internal, Hemodialysis machine.

UNIT – IV

Monitory and Imaging Equipment:

Spirometry, Ventilators, Arrhythmia Monitor, Foetal Monitor and Incubator. X-ray machine, Computed Tomography (CT), Magnetic Resonance Imaging System, Ultrasound Imaging system.

UNIT – V

Patient Care and Safety:

The elements of Intensive Care Monitor, Diagnosis, Calibration and reparability of Patient Monitoring equipment, Shock Hazards and Prevention, Physiological Effects and Electrical Current, Shock Hazards from Electrical Equipment, Methods of Accident Prevention, and Isolated Power Distribution System.

Text Books:

1. Leslie Cromwell, F.J. Weibell, E.A. Pfeiffer, *Biomedical Instrumentation and Measurements.*
   2nd Edition, PHI, 2004.
2. Dr. M. Arumugam, *Biomedical Instrumentation.* 2nd Edition, Anuradha publications, 2002.

Reference Books:

1. R.S. Khandpur, *Hand-book of Biomedical Instrumentation.* 2nd Edition, TMH, 2003.
2. John G. Webster, *Medical Instrumentation, Application and Design.* John Wiley, 3rd Edition, 2009.
3. Onkar N. Pandey, Rakesh Kumar, *Bio-Medical Electronics and Instrumentation.* 3rd Edition, Katson Books, 2002.

Web Links:

1 https://onlinecourses.nptel.ac.in/e-learning/preview/noc25_bt49.

2 https://www.youtube.com/watch?v=Qq3t01LytkU&list=PLnsf_0i_t0FC4EdRdhLwjQgp5cYytJ5Oe.

Fundamentals of Wireless Communications

(CE,EEE,ME,CSE,IT,DS,AIML,PT,Min.E, Ag.E)

	L	T	P	C
Course Code:2501EC98	**3**	**0**	**0**	**3**

Course Outcomes:

At the end of the course, student will be able to:

CO1: Explain the fundamentals of wireless communication systems, spectrum allocation, and wireless standards.
CO2: Understand Analog ,digital and multicarrier OFDM modulation techinqies.
CO3: Compare multiple access techniques used in wireless communication systems.
CO4: Explain the architecture and standards of WPAN, WLAN, and WMAN technologies.
CO5: Compare cellular generations and LTE network architecture for modern mobile communications.

Mapping of Course Outcomes with Program Outcomes:

CO/PO	PO 1	PO 2	PO 3	PO 4	PO 5	PO 6	PO 7	PO 8	PO 9	PO 10	PO 11
CO1	3	2									1
CO2	3	3	2	1	1						2
CO3	3	3	2								1
CO4	3	2	1	1	1						1
CO5	3	3	2	2	1						2

Mapping of Course Outcomes with Program Specific Outcomes:

CO/PSO	PSO1	PSO2
CO1		2
CO2		2
CO3		2
CO4		2
CO5		2

UNIT – I

Overview of Wireless Communication:

History of wireless communication, Current Wireless Systems: Cellular Telephone Systems, Generations, Cordless Phones, Wireless LANs, Wide Area Wireless Data Services, Broadband Wireless Access, Paging systems, Satellite Networks, Bluetooth, ZigBee, Ultra-wideband Radios. The Wireless Spectrum: Methods for Spectrum Allocation, Spectrum Allocations for Existing Systems, Standards.

UNIT – II

Modulation for Wireless Communication:

Need for Modulation, Analog Modulation, Amplitude modulation, Double sideband Supressed carrier, single sideband supressed carrier, Angle modulation, Digital modulation: Amplitude Shift Keying, Frequency Shift Keying Techniques, Phase-Shift Keying Techniques,BPSK and QPSK. Multicarrier-Modulation, Orthogonal Frequency Division Multiplexing.

UNIT – III

Multiple Access Techniques:

Contention-free multiple access schemes, Frequency-Division Multiple Access (FDMA),Time-Division Multiple Access (TDMA),Code-Division Multiple Access(CDMA), Space-division, contention-based multiple access schemes (ALOHA and CSMA).

UNIT – IV

Wireless Personal Area Networks:

Bluetooth, UWB and ZigBee, wireless local area networks (IEEE 802.11, network architecture, medium access methods, WLAN standards), wireless metropolitan area networks (WiMAX).

UNIT – V

Wireless Mobile Networks and Applications:

Principles of Cellular Networks, First- Generation Analog, Second- Generation TDMA, CDMA, Third-Generation Systems, Fourth Generation Systems, LTE Architecture, Evolved Packet Core, LTE Resource Management.

Text Books:

1. Wireless communications- Goldsmith Andrea, Cambridge university press, 2005, ISBN: 9780511841224.
2. Wireless communication networks and systems-Cory Beard, and William Stallings, Pearson education (Global Edition), 2015, ISBN: 978-1292108728

Reference Books:

1. Wireless Communication the Fundamental and Advanced Concepts-Sanjay Kumar River Publishers, Denmark, 2015 ISBN: 9781000795325
2. Wireless communications:Principles and Practice,2nd Edition, Theodore S.Rappaport, Pearson education, 2010.
3. Fundamentals of wireless communication.- Tse, David, and Pramod Viswanath. Cambridge university press, 2005.

Web Links:

1. https://nptel.ac.in/courses/106106167 by Prof. David Koilpillai, IIT Madras
2. https://nptel.ac.in/courses/117104115 by Aditya K. Jagannatham, IIT Kanpur

Principles Of Embedded Systems

(CE,EEE,ME,CSE,IT,DS,AIML,PT,Min.E, Ag.E)

	L	T	P	C
Course Code: 2501EC99	**3**	**0**	**0**	**3**

Course Outcomes: At the end of the Course, Students will be able to:

CO1: Summarize the building blocks of an embedded system.
CO2: Interpret the hardware modules required to design an embedded system.
CO3: Infer the firmware design approaches for an embedded system.
CO4: Illustrate the hardware integration with firmware.
CO5: Outline the process of embedded system development and choose the tools for embedded system implementation and testing.

Mapping of Course Outcomes with Program Outcomes:

CO/PO	PO1	PO2	PO3	PO4	PO5	PO6	PO7	PO8	PO9	PO10	PO11
CO1	3	2	-	-	-	-	-	-	-	-	-
CO2	3	2	-	-	-	-	-	-	-	-	-
CO3	3	2	-	-	-	-	-	-	-	-	-
CO4	3	2	1	-	-	-	-	-	-	-	-
CO5	2	3	1	-	-	-	-	-	-	-	-

Mapping of Course Outcomes with Program Specific Outcomes:

CO/PSO	PSO1	PSO2
CO1		
CO2		
CO3		
CO4		
CO5		

UNIT – I

Introduction: Embedded system-Definition, History of Embedded systems, classification of embedded systems, major application areas of embedded systems, purpose of embedded systems, the typical embedded system, core of the embedded system, Memory, Sensors and Actuators, Communication Interface, Characteristics of an embedded system, Quality attributes of embedded systems, Application-specific and Domain-Specific examples of an embedded system.

UNIT – II

Embedded Hardware Design: Analog and digital electronic components, I/O types and examples, Serial communication devices, Parallel device ports, Wireless devices, Timer and counting devices, Watchdog timer, Real time clock, multi processors architectures.

UNIT – III

Embedded Firmware Design: Embedded Firmware design approaches, Embedded Firmware development languages, Interrupt sources, ISR concept, Interrupt servicing mechanism, Multiple interrupts, DMA, Device driver programming, Concepts of C versus Embedded C.

UNIT – IV

RealTime Operating System: Operating system basics, Types of operating systems, Tasks, Process and Threads, Multiprocessing and Multitasking, Task Scheduling, Threads, Processes and Scheduling, Task communication, Task synchronization.

Hardware Software Co-Design:

Fundamental Issues in Hardware Software Co-Design, Computational models in embedded design, Hardware software Trade-offs, Integration of Hardware and Firmware.

UNIT – V

Embedded System Development: The integrated development environment, Types of files generated on cross-compilation, Deassembler/Decompiler, Simulators, Emulators and Debugging, Target hardware debugging, Boundary Scan, Embedded Software development process and tools. Embedded System Implementation and Testing: The main software utility tool, CAD and the hardware, Translation tools-Pre-processors, Interpreters, Compilers and Linkers, Debugging tools, Quality assurance and testing of the design, Testing on host machine.

Text Books:

1. Introduction to Embedded Systems, Shibu.K.V, Tata McGraw Hill Education Private Limited, 2nd Edition, 2016.
2. Embedded Systems – SoC, IoT, AI and Real-Time Systems, Raj Kamal, McGraw Hill Education India 4th Edition, 2020.

Reference Books:

1. Embedded System Design, Frank Vahid and Tony Givargis, John Wiley Publications, 2013.
2. Hardware Software Co-Design Principles and Practice, J.Staunstrup, Springer Publications, 2013
3. Embedded Systems Architecture, Tammy Noergaard, Elsevier Publications, 3rd Edition,2013.

Web Links:

1. https://www.coursera.org/learn/introduction-embedded-systems
2. https://www.linkedin.com/learning/introduction-to-embedded-systems-with-rust
3. https://www.udemy.com/course/embedded-systems-and-microcontrollers/

Electronics For Health Care

(CE,EEE,ME,CSE,IT,DS,AIML,PT,Min.E, Ag.E)

	L	T	P	C
Course Code: 2501ECA0	**3**	**0**	**0**	**3**

At the end of the course, student will be able to:

CO1: Know about health care data and its conversion to information and to knowledge.
CO2: Acquire knowledge on (Electronic Health Records) EHRs and their Implementation.
CO3: Understand the working of electronic devices used for the patient monitoring.
CO4: Know the concepts of Telemedicine and therapeutic devices used inside the human body.
CO5: Understand and analyse the working principles, design, and clinical applications of therapeutic devices.

Mapping of Course Outcomes with Program Outcomes:

CO/PO	PO 1	PO 2	PO 3	PO 4	PO 5	PO 6	PO 7	PO 8	PO 9	PO 10	PO 11
CO1	2	2	-	1	-	-	-	-	1	-	1
CO2	1	1	-	1	-	-	-	-	1	-	1
CO3	1	1	-	1	-	-	-	-	1	-	1
CO4	1	1	-	1	-	-	-	-	1	-	1
CO5	1	1	-	1	-	-	-	-	1	-	1

Mapping of Course Outcomes with Program Specific Outcomes:

CO/PSO	PSO1	PSO2
CO1		2
CO2		2
CO3		2
CO4		2
CO5		2

UNIT-I:

Health care data, Information and Knowledge: Definitions and Concepts, Converting Data to Information to Knowledge, Clinical Data Warehouses, what makes Health Informatics Difficult, Why Health IT fails Sometimes, Terminology of Analytics, Challenges to Data Analytics, Research and application of analytics, Role of Informatics in analytics.

UNIT-II:

Electronic Health Records: Introduction, Need for Electronic Health Records, Institute of Medicine's Vision for EHRs, Electronic Health Record Key Component, Electronic Prescribing, Electronic Health Record Adoption, Electronic Health Record Adoption and Meaningful use Challenges, Electronic Health Record Examples, Logical Steps to Selecting and Implementing an HER.

UNIT-III:

Patient Monitoring Systems: System Concepts, Cardiac Monitor, Bedside Patient Monitoring Systems, Central Monitors, Measurement of Heart Rate, Measurement of Pulse Rate, Blood Pressure Measurement, Measurement of Temperature, Measurement of Respiration Rate, Catheterization Laboratory Instrumentation.

UNIT-IV:

Biomedical Telemetry and Telemedicine: Wireless Telemetry, Single Channel Telemetry Systems, Multi-channel Wireless Telemetry Systems, Multi-patient Telemetry, Implantable Telemetry Systems, Transmission of Analog Physiological Signals, Over Telephone, Telemedicine.

UNIT-V:

Therapeutic Devices: Need for Cardiac Pacemaker, Implantable Pacemakers, DC Defibrillator, Electronics in the Anaesthetic Machine.

Text Books:

1. Robret E. Hoyt MD FACP "Health Informatics" sixth edition 2007.
2. R. S. Kandpur "Biomedical Instrumentation Technology and Applications" second edition
Tata McGraw-Hill.

Reference Books:

1. Edward H. Shortlliffe, James J.Cimino "Biomedical Informatics, Computer applications in Health care and Biomedicine" third edition Springer.
2. G.V.R.K. Acharyulu, Bhimaraya Metri, L. Kalyan Viswanath REDDY "Health care and Hospital Management Contemporary Issues and Strategies".

Web Links:

1. https://onlinecourses.nptel.ac.in/e-learning/preview/noc26_ge25.
2. https://onlinecourses.nptel.ac.in/e-learning/preview/noc26_hs82.
3. https://onlinecourses.nptel.ac.in/e-learning/preview/noc26_bt09.

Basics of VLSI Design

(CE,EEE,ME,CSE,IT,DS,AIML,PT,Min.E, Ag.E)

	L	T	P	C
Course Code: 2501ECA1	**3**	**0**	**0**	**3**

Course Outcomes: At the end of the Course, Students will be able to:

CO1: Outline the fundamental concepts related to MOS and Bi-CMOS Circuits fabrication.
CO2: Analyze the electrical properties of MOS and Bi-CMOS Circuits.
CO3: Make use of design rules for developing stick and layout diagrams.
CO4: Interpret the issues related to subsystem design.
CO5: Interpret FPGA and ASIC design approaches for semi-custom design.

Mapping of Course Outcomes with Program Outcomes:

CO/PO	PO1	PO2	PO3	PO4	PO5	PO6	PO7	PO8	PO9	PO10	PO11
CO1	3	2	2								1
CO2	2	3	2								1
CO3	2	1	3								1
CO4	2	2	1								1
CO5	3	2	1								1

Mapping of Course Outcomes with Program Specific Outcomes:

CO/PSO	PSO1	PSO2
CO1		
CO2		
CO3		
CO4		
CO5		

UNIT – I

Introduction: Introduction to IC Technology, MOS and related VLSI Technology, Basic MOS Transistors, Enhancement and Depletion modes of transistor action, IC production process, MOS and CMOS Fabrication processes, Bi-CMOS Technology, Comparison between CMOS and Bipolar technologies.

UNIT – II

Basic Electrical Properties of MOS and Bi-CMOS Circuits: Ids versus Vds Relationships, Threshold Voltage, MOS transistor Trans-conductance, Output Conductance and Figure of Merit, The Pass transistor, NMOS Inverter, Alternative forms of the pull-up, The CMOS Inverter, Bi- CMOS Inverter, Transistor switches, Schematics of Inverter, NAND, NOR gates using NMOS, PMOS, and CMOS technologies.

UNIT – III

MOS Circuit Design Processes: MOS Layers, Design Rules, General observations of design rules, 2µm Double Metal, Double Poly, CMOS rules, 1.2µm Double Metal, Double Poly CMOS rules, Stick Diagrams, Layout Diagrams of NAND and NOR gates and CMOS inverter.

UNIT – IV

Basic Circuit Concepts: Sheet Resistance, Sheet Resistance concept applied to MOS transistors and Inverters, Area Capacitance of Layers, Standard unit of capacitance, The Delay Unit, Inverter Delays, Propagation Delays, Wiring Capacitances.

UNIT – V

IC Design: PLAs, PLDs, FPGA, ASIC, Selection of an Appropriate Integrated Circuit.
FPGA Design Process: Architectures of Popular FPGAs, Choosing an FPGA, FPGA Design Process, FPGA Families of Different Vendors, FPGA Design Examples.

Text Books:

1. Essentials of VLSI Circuits and Systems by Kamran Eshraghian, Douglas and A. Pucknell, Sholeh Eshraghian, Prentice-Hall of India Private Limited, ISBN: 978-8120327726
2. VLSI Design, Black Book by Dr. K.V.K.K. Prasad, Kattula Shyamala, Kogent Learning Solutions Inc, ISBN: 978-9350048047

Reference Books:

1. CMOS Digital Integrated Circuits Analysis & Design, Sung-Mo (Steve) Kang, Yusuf Leblebici, Tata McGraw-Hill, 3rd Edition, ISBN: 978-0072460537
2. Modern VLSI Design-Wolf Wayne, Pearson Edition, 3rd Edition, ISBN: 978-0130619709
3. VLSI Design, K. LalKishore, V.S.V.Prabhakar, I.K. International Publishing House Private Limited, 1st Edition, ISBN: 978-9380026671

Web Links:

1. **NPTEL – VLSI Physical Design-** https://nptel.ac.in/courses/106105161
2. **NPTEL – Advanced VLSI Design** https://nptel.ac.in/courses/117/101/117101004.

System on Chip Design

(CE,EEE,ME,CSE,IT,DS,AIML,PT,Min.E, Ag.E)

	L	T	P	C
Course Code: 2501ECA2	**3**	**0**	**0**	**3**

Course Outcomes:

At the end of the course student will be able to:

CO1: Explain all the building blocks of SoC.
CO2: Classify the concept of processors and instruction handling.
CO3: Analyze vector, VLIW and superscalar processors.
CO4: Develop a Memory as part of SoC.
CO5: Illustrate the concepts of interconnect optimization and configuration in SoC.

Mapping of Course Outcomes with Program Outcomes:

CO/PO	PO 1	PO 2	PO 3	PO 4	PO 5	PO 6	PO 7	PO 8	PO 9	PO 10	PO 11
CO1	3	1	-	-	-	-	-	-	-	-	1
CO2	3	2	-	-	-	-	-	-	-	-	1
CO3	2	2	1	-	-	-	-	-	-	-	1
CO4	2	2	2	-	-	-	-	-	-	-	1
CO5	2	2	1	-	-	-	-	-	-	-	1

Mapping of Course Outcomes with Program Specific Outcomes:

CO/PSO	PSO1	PSO2
CO1	-	2
CO2	-	2
CO3	-	2
CO4	-	2
CO5	-	2

UNIT – I

Introduction to the System Approach:

System Architecture, Components of the system, Hardware & Software, Processor Architectures, Memory and Addressing. System level interconnection, An approach for SOC Design, System Architecture and Complexity.

UNIT – II

Processors:

Introduction , Processor Selection for SOC, Basic concepts in Processor Architecture, Basic concepts in Processor Micro Architecture, Basic elements in Instruction handling. Buffers:minimizing Pipeline Delays, Branches, More Robust Processors, Vector Processors and Vector Instructions extensions, VLIW Processors, Superscalar Processors.

UNIT – III

Memory Design for SOC:

Overview of SOC external memory, Internal Memory, Size, Scratchpads and Cache memory, Cache Organization, Cache data, Write Policies, Strategies for line replacement at miss time, Types of Cache, Split – I, and D – Caches, Multilevel Caches, Virtual to real translation , SOC Memory System, Models of Simple Processor – memory interaction.

UNIT – IV

Interconnect Customization:

Inter Connect Architectures, Bus: Basic Architectures, SOC Standard Buses, Analytic Bus Models, Using the Bus model, Effects of Bus transactions and contention time. SOC Customization: An overview, Customizing Instruction Processor.

UNIT – V

Interconnect Configuration:

Reconfiguration Technologies, Mapping design onto Reconfigurable devices, Instance Specific design, Customizable Soft Processor, Reconfiguration – overhead analysis and trade-off analysis on reconfigurable Parallelism.

Text Books:

1. Computer System Design System-on-Chip, Michael J. Flynn and Wayne Luk, Wiley India Pvt. Ltd,ISBN: 978-0470643365.
2. ARM System on Chip Architecture, Steve Furber, Addison Wesley Professional, 2nd Edition, ISBN : 9780201675191 .

Reference Books:

1. Design of System on a Chip: Devices and Components, Ricardo Reis, Springer 1st Edition, ISBN: 978-1441954541.
2. Co-Verificationof Hardware and Software for ARM System on Chip Design (Embedded Technology), Jason Andrews, Newnes, BK and CDROM, ISBN: 978-0750677301.
3. System on Chip Verification–Methodologies and Techniques, Prakash Rashinkar, Peter Paterson and Leena Singh L, Kluwer Academic Publishers, ISBN: 978-0792372790.

Web Links:

1. https://www.peterindia.net/System-On-ChipLinks.html
2. https://www.ieee-socc.org/
3. http://nptel.ac.in/courses/108102045/10 (Prof. Santanu Chaudhary, IIT Delhi)

Introduction to Quantum Computing

(CE,EEE,ME,CSE,IT,DS,AIML,PT,Min.E, Ag.E)

	L	T	P	C
Course Code: 2501ECA3	**3**	**0**	**0**	**3**

Course Outcomes:

At the end of the course, student will be able to:

CO1: Understand the fundamentals of quantum computing and qubits.
CO2: Build simple quantum circuits.
CO3: Analyze quantum circuits and algorithms.
CO4: Identify different quantum hardware technologies and their challenges.
CO5: Outline real time applications of quantum computing in various fields

Mapping of Course Outcomes with Program Outcomes:

CO/PO	PO 1	PO 2	PO 3	PO 4	PO 5	PO 6	PO 7	PO 8	PO 9	PO 10	PO 11
CO1	2					2					
CO2	2	2			3		2	1		1	2
CO3	2		1			2	2	1		2	2
CO4	2	2	3			2	2	2		2	
CO5	3	3	3	2		2	2	3		2	

Mapping of Course Outcomes with Program Specific Outcomes:

CO/PSO	PSO1	PSO2
CO1	2	
CO2	2	
CO3	2	
CO4	2	
CO5	2	

UNIT – I

Fundamentals of Quantum Computing:

Evolution from Classical Computing to Quantum Computing, Need for Quantum Computing, Classical Bits vs Qubits, Principles of Quantum Mechanics for Computing, Superposition and Measurement, Quantum States and Bloch Sphere Representation, Introduction to Quantum Gates, Quantum Computing Platforms and Ecosystem.

UNIT – II

Quantum Circuits and Computing Concepts:

Quantum Circuit Model, Single Qubit and Multi-Qubit Systems, Common Quantum Gates: Pauli, Hadamard, Phase, CNOT, Quantum Entanglement, Quantum Parallelism, Quantum

Teleportation (Conceptual Understanding), Basic Quantum Circuit Design, Introduction to Quantum Simulators.

UNIT – III

Quantum Algorithms:

Introduction to Quantum Algorithms, Deutsch–Jozsa Algorithm, Grover's Search Algorithm, Shor's Factorization Algorithm (Overview), Quantum Fourier Transform (Basic Idea), Quantum Speedup and Computational Advantage, Hybrid Quantum-Classical Computing, Introduction to Quantum Machine Learning.

UNIT – IV

Quantum Hardware and Programming:

Overview of Quantum Hardware Technologies: Superconducting Qubits, Trapped Ion Systems, Photonic Quantum Computing. Noise and Decoherence, Quantum Error Correction (Basic Concepts), Introduction to NISQ Devices, Basics of Quantum Programming using Python and Qiskit, Introduction to IBM Quantum Experience.

UNIT – V

Applications of Quantum Computing:

Quantum Cryptography and Cybersecurity, Quantum Computing in Healthcare and Drug Discovery, Optimization Problems and Smart Systems, Quantum in Finance & Logistics, Quantum computing for Industrial Applications and Future Scope, Ethical and Societal Impact of Quantum Technologies.

Text Books:

1. Quantum Computation and Quantum Information – Michael A. Nielsen & Isaac L. Chuang.
2. Eleanor Rieffel and Wolfgang Polak, Quantum Computing: A Gentle Introduction, MIT Press, First Edition, 2011.

Reference Books:

1. **Eric R. Johnston, Nic Harrigan, and Mercedes Gimeno-Segovia**, Programming Quantum Computers: Essential Algorithms and Code Samples, O'Reilly Media, First Edition, 2019.

Web Links:

1. https://quantum.cloud.ibm.com/?utm_source=chatgpt.com
2. https://quantum.cloud.ibm.com/docs/en/guides

Data Structures

(CE, ME, PT, Min.E.)

	L	T	P	C
Course Code: 2501CS03	**2**	**0**	**2**	**4**

Course Outcomes:
At the end of the course, student will be able to:

CO1: Utilize structure, union to handle heterogeneous data.
CO2: Illustrate Time and Space complexities for different sorting Algorithms
CO3: Demonstrate various operations on Linked Lists
CO4: Explain different operations on Stack and Queue with applications.
CO5: Demonstrate the importance and various operation on non-linear data structures

Mapping of Course Outcomes with Program Outcomes:

CO/PO	PO 1	PO 2	PO 3	PO 4	PO 5	PO 6	PO 7	PO 8	PO 9	PO 10	PO 11
CO1	1	1	2					1	1		
CO2	1	1	2	2				1	1		
CO3	1	2	2	1				1	1		
CO4	1	1	2	1				1	1		
CO5	1	1	2	2				1	1		

Mapping of Course Outcomes with Program Specific Outcomes:

CO/PSO	PSO1	PSO2
CO1	3	-
CO2	2	-
CO3	2	-
CO4	2	-
CO5	2	-

UNIT – I

Structures and Unions: Introduction, Nested Structures, Arrays of Structures, Structures and Functions, Self-Referential Structures, Unions, Enumerated Data Type - enum variables, Using Typedef keyword, Bit Fields.

Data Structures: Introduction to Data Structures, Types of Data Structures.

Practice:

3. Write a C program to find the total, average of n students using structures
4. Copy one structure variable to another structure of the same type.
5. Read student name and marks from the command line and display the student details along with the total.

UNIT – II

Introduction to Linear Data Structures: Definition and importance of linear data structures, Abstract data types (ADTs) and their implementation, Overview of time and space complexity analysis for linear data structures.

Sorting Techniques: Quick sort, Merge sort, Radix sort

Practice:

5. Implement Merge sort using arrays.
   https://www.hackerrank.com/contests/hw1/challenges/merge-sort
6. Implement Quick sort using arrays

https://www.hackerrank.com/challenges/quicksort1/problem

7. Implement Radix Sort using arrays
   https://www.hackerrank.com/contests/hw1/challenges/radix-sort?utm_source

UNIT – III

Linked Lists: Singly linked lists: representation and operations, doubly linked lists and its operations and circular linked lists and its operations, Comparing arrays and linked lists, Applications of linked lists.

Practice:

4. Single Linked List: Perform different operations in single linked list.
   https://leetcode.com/problems/design-linked-list/description/?utm_source
5. Perform different operations in double linked list
   https://leetcode.com/problems/design-linked-list/?utm_source
6. Circular Linked List
   https://www.codechef.com/practice/course/linked-lists/LINKLISTF/problems/PREP58?utm_source

UNIT – IV

Stacks: Introduction to stacks: properties and operations, implementing stacks using arrays and linked lists, applications of stacks.

Queues: Introduction to queues: properties and operations, Types of Queues, implementing queues using arrays and linked lists, applications of queues.

Practice:

5. Stack and its operations using arrays and Linked List
   https://www.hackerrank.com/challenges/balanced-brackets/problem
   https://leetcode.com/problems/design-linked-list/description/?utm_source
6. Implement a program to evaluate a postfix expression.
   https://leetcode.com/problems/evaluate-reverse-polish-notation/description/
7. Queue and its operations using arrays and Linked List
   https://leetcode.com/problems/implement-queue-using-stacks/description/
   https://leetcode.com/problems/design-linked-list/description/?utm_source
8. Implement Circular Queue using Arrays
   https://leetcode.com/problems/design-circular-queue/description/

UNIT – V

Non-linear Data Structures:

Trees: Difinition of tree, Tree Terminology, types of trees, Binary tree traversals, Binary Search Tree – Insertion, Deletion.

Graphs: Definition and Terminology – Representation of Graphs-Adjacency Matrix and Linked list, Graph Traversals (BFT & DFT)

Practice:

1. Implement Binary search tree (BST).
   https://leetcode.com/problems/insert-into-a-binary-search-tree/description/
   https://leetcode.com/problems/delete-node-in-a-bst/description/
2. Implement Binary search Tree (BST) Traversals.
   https://www.hackerrank.com/challenges/tree-inorder-traversal/problem
   https://www.hackerrank.com/challenges/tree-preorder-traversal/problem
   https://www.hackerrank.com/challenges/tree-postorder-traversal/problem
3. Graph Traversal using Breadth First Search (BFS)
   https://www.hackerrank.com/challenges/bfsshortreach/problem

4. Graph Traversal using Depth First Search (DFS)
https://leetcode.com/problems/number-of-islands/description/

Text Books:

1. Data Structures using C, Rema Theraja, Oxford University Press, 3rd Edition. ISBN: 978-9354979453
2. Data Structures, KV Sambasivarao, S Rama Sree, S.Chand. ISBN: 978-9358704730

Reference Books:

1. The Algorithm Design Manual, Steven S. Skiena, Springer Publication, Second Edition. ISBN: 978-1849967204
2. Fundamentals of data structures in C, Ellis Horowitz, Sartaj Sahni, Susan Anderson-Freed, Silicon Press, ISBN: 978-0716782506
3. Data Structures and Algorithms by Maganti Venkatesh, Naresh. ISBN: 9780929306407
4. Data Structures Using C, Reema Thareja, Oxford University Press, 2nd Edition. ISBN: 978-0198099307

Web Links:

1. https://nptel.ac.in/courses/106102064
2. https://archive.nptel.ac.in/courses/106/105/106105225/
3. https://www.udemy.com/topic/data-structures/
4. https://www.coursera.org/specializations/data-structures-algorithms
5. https://ds1-iiith.vlabs.ac.in/List%20of%20experiments.html

Additional Practice:

SNO	Difficulty	Problem Name	URL
1	Easy	Structs and enums	https://www.hackerrank.com/challenges/too-high-boxes/problem
2	Easy	Structs and enums	https://www.codechef.com/problems/HS08TEST?tab=statement
3	Medium	Structs and enums	https://www.hackerrank.com/challenges/small-triangles-large-triangles/problem
4	Easy	Arrays and Hashtables	https://leetcode.com/problems/two-sum/description/
5	Easy	Arrays and Pointers	https://leetcode.com/problems/remove-duplicates-from-sorted-array/description/?utm_source
6	Medium	Arrays and Pointers	https://leetcode.com/problems/two-sum-ii-input-array-is-sorted/description/?utm_source
7	Easy	Linked List	https://leetcode.com/problems/merge-two-sorted-lists/description/
8	Medium	Arrays and Matrix	https://leetcode.com/problems/diagonal-traverse/description/
9	Easy	Linked List	https://www.hackerrank.com/challenges/compare-two-linked-lists/problem
10	Medium	Stack applications	https://www.geeksforgeeks.org/problems/tower-of-hanoi-1587115621/1?utm

11	Medium	Binary Tree	https://leetcode.com/problems/binary-tree-right-side-view/description/
12	Medium	Stack applications	https://leetcode.com/problems/remove-k-digits/description/
13	Medium	Graph Theory	https://www.hackerrank.com/challenges/journey-to-the-moon/problem
14	Medium	Graph Traversals	https://leetcode.com/problems/number-of-provinces/description/
15	Medium	Graph Theory	https://www.hackerrank.com/challenges/torque-and-development/problem

	Basic Programs	**Aditya's Internal coding Platform(Maya)**	**Code chef**	**Hacker rank**	**Leet code**	**Geek for Geeks**
Unit-1	3	0	0	0	0	0
Unit-2	0	0	0	3	0	0
Unit-3	0	0	1	0	2	0
Unit-4	0	0	0	1	5	0
Unit-5	0	0	0	4	3	0
Additional Practice	0	0	1	5	8	1
Total	**3**	**0**	**2**	**13**	**18**	**1**

Data Structures using C++

(CE, ME, PT, Min.E.)

(Revised Syllabus for batches admitted from 2026 Onwards)

	L	T	P	C
Course Code: 2601DS02	**2**	**0**	**2**	**4**

Course Outcomes:
At the end of the course, student will be able to:

CO1: Apply C++ features for problem solving.
CO2: Apply various sorting techniques to solve computing problems.
CO3: Make use of linear data structures to solve real time problems.
CO4: Develop applications using Tree data structures.
CO5: Solve problems using Graph algorithms.

Mapping of Course Outcomes with Program Outcomes:

CO/PO	PO 1	PO 2	PO 3	PO 4	PO 5	PO 6	PO 7	PO 8	PO 9	PO 10	PO 11
CO1	1	1	1					1	1		
CO2	1	1	2	2				1	1		
CO3	1	2	2	1				1	1		
CO4	1	1	2	1				1	1		
CO5	1	1	2	2				1	1		

Mapping of Course Outcomes with Program Specific Outcomes:

CO/PSO	PSO1	PSO2
CO1	2	-
CO2	2	-
CO3	2	-
CO4	2	-
CO5	2	-

UNIT – I

An Overview of C++: Structure of C++ program, Input and output in C++, Class, Objects,Members Functions, Access Specifiers, Introduction to Constructors and Destructor. **Overview of Standard Template Library:** Introduction, STL Programming Model, Containers, Sequence Containers, Associative Containers, Algorithms, Iterators, Vectors, Lists, Maps.

Practice:

1. Find the roots of a quadratic equation.
2. Find factorial of a given number using recursion
3. Palindrome Number
   https://leetcode.com/problems/palindrome-number/description/
4. Class and Objects
   https://www.hackerrank.com/challenges/classes-objects/problem?isFullScreen=true
5. Program to illustrate the use of Constructors and Destructors.

6. C++ Class Templates
https://www.hackerrank.com/challenges/cpp-class-template-specialization/problem?isFullScreen=true

UNIT – II

Data Structures: Introduction to Data Structures, Types of Data Structures.

Linear Data Structures: Definition and importance of linear data structures, Abstract data types (ADTs) and their implementation.

Linked Lists: Singly linked lists: Representation and operations, Doubly linked lists and its operations and Circular linked lists and its operations, applications of linked list

Practice:

1. Single Linked List: Perform different operations in single linked list.
https://leetcode.com/problems/design-linked-list/description/?utm_source
2. Perform different operations in double linked list
https://leetcode.com/problems/design-linked-list/?utm_source
3. Circular Linked List
https://www.codechef.com/practice/course/linked-lists/LINKLISTF/problems/PREP58?utm_source
4. Reversing a Linked List

UNIT – III

Stacks: Introduction to stacks: properties and operations, implementing stacks using arrays and linked lists, applications of stacks.

Queues: Introduction to queues: properties and operations, Types of Queues, implementing queues using arrays and linked lists, applications of queues.

Practice:

1. Stack and its operations using arrays and Linked List
https://www.hackerrank.com/challenges/balanced-brackets/problem

   https://leetcode.com/problems/design-linked-list/description/?utm_source
2. Implement a program to evaluate a postfix expression.
https://leetcode.com/problems/evaluate-reverse-polish-notation/description/
3. Queue and its operations using arrays and Linked List
https://leetcode.com/problems/implement-queue-using-stacks/description/

   https://leetcode.com/problems/design-linked-list/description/?utm_source
4. Implement Circular Queue using Arrays
https://leetcode.com/problems/design-circular-queue/description/

UNIT – IV

Trees: Definition of tree, Tree Terminology, Representation of tree, Types of trees-Binary Tree, BST, BST, Binary tree traversals-Inorder,Preorder,Postorder Traversals.

Binary Search Trees – Definition, Operations: Searching, Insertion, Deletion.

Practice:

1. Implement Binary search tree (BST).

https://leetcode.com/problems/insert-into-a-binary-search-tree/description/
https://leetcode.com/problems/delete-node-in-a-bst/description/

2. Implement Binary search Tree (BST) Traversals.
   https://www.hackerrank.com/challenges/tree-inorder-traversal/problem
   https://www.hackerrank.com/challenges/tree-preorder-traversal/problem

   https://www.hackerrank.com/challenges/tree-postorder-traversal/problem

UNIT – V

Graphs: Definition and Terminology, Types of Graph, Representation of Graphs-Adjacency Matrix and Adjaceny list, Graph Traversals (BFS & DFS), Bi-Connected Components.

Practice:

1. Graph Traversal using Breadth First Search (BFS)
   https://www.hackerrank.com/challenges/bfsshortreach/problem
2. Graph Traversal using Depth First Search (DFS)
   https://leetcode.com/problems/number-of-islands/description/

Text Books:

1. The Complete Reference C++, Herbert Schildt, TMH, Fourth Edition, ISBN-10. 0070411832.
2. Fundamentals of Data Structures in C++,Ellis Horowitz, Sartaj Sahni, DineshMehta, ISBN: 81-7515-278-8
3. Data Structures, KV Sambasivarao, S Rama Sree, S.Chand. ISBN: 978-9358704730

Reference Books:

1. The C++ Programming Language, Bjarne Stroustrup, Pearson, Fourth Edition,ISBN · 9780133522884.
2. Object oriented programming in C++, JoyceeFarrell,Cengage, ISBN : 978-1418836269
3. Data structures and algorithms in C++, 3rd edition, Adam Drozdek,Thomson, ISBN: 9788131521267
4. The Algorithm Design Manual, Steven S. Skiena, Springer Publication, Second Edition. ISBN: 978-1849967204
5. Data Structures and Algorithms by Maganti Venkatesh, Naresh. ISBN: 9780929306407

Web Links:

1. http://nptel.ac.in/courses/106105151/
2. https://nptel.ac.in/courses/106102064
3. https://archive.nptel.ac.in/courses/106/105/106105225/
4. https://www.udemy.com/topic/data-structures/
5. https://www.coursera.org/specializations/data-structures-algorithms
6. https://ds1-iiith.vlabs.ac.in/List%20of%20experiments.html

Additional Practice:

S. NO	Difficulty	Problem Name	URL
1	Easy	Arrays and Hashtables	https://leetcode.com/problems/two-sum/description/
2	Easy	Arrays and Pointers	https://leetcode.com/problems/remove-duplicates-from-sorted-array/description/?utm_source
3	Medium	Arrays and Pointers	https://leetcode.com/problems/two-sum-ii-input-array-is-sorted/description/?utm_source
4	Easy	Linked List	https://leetcode.com/problems/merge-two-sorted-lists/description/
5	Medium	Arrays and Matrix	https://leetcode.com/problems/diagonal-traverse/description/
6	Easy	Linked List	https://www.hackerrank.com/challenges/compare-two-linked-lists/problem
7	Medium	Stack applications	https://www.geeksforgeeks.org/problems/tower-of-hanoi-1587115621/1?utm
8	Medium	Binary Tree	https://leetcode.com/problems/binary-tree-right-side-view/description/
9	Medium	Stack applications	https://leetcode.com/problems/remove-k-digits/description/
10	Medium	Graph Theory	https://www.hackerrank.com/challenges/journey-to-the-moon/problem
11	Medium	Graph Traversals	https://leetcode.com/problems/number-of-provinces/description/
12	Medium	Graph Theory	https://www.hackerrank.com/challenges/torque-and-development/problem

	Basic Programs	Code chef	Hacker rank	Leet code	Geek for Geeks
Unit-1	3	0	2	1	0
Unit-2	0	1	3	2	0
Unit-3	0	0	1	5	0
Unit-4	0	0	3	2	0
Unit-5	0	0	1	1	0
Additional Practice	0	0	3	8	1
Total	3	1	13	19	1

Operating Systems

(CE, EEE, ME, ECE, PT, Min.E., Ag.E.)

	L	T	P	C
Course Code: 2501CS13	**2**	**0**	**1**	**3**

Course Outcomes:
At the end of the course, student will be able to:

CO1: Describe basic concepts of Operating Systems and its structure.
CO2: Analyse various issues related to inter process communication like process scheduling, resource management and deadlocks.
CO3: Interpret the issues and challenges of memory management.
CO4: Illustrate concepts of Disk management and file system implementation.
CO5: Explain issues related to protection and security mechanisms.

Mapping of Course Outcomes with Program Outcomes:

CO/PO	PO 1	PO 2	PO 3	PO 4	PO 5	PO 6	PO 7	PO 8	PO 9	PO 10	PO 11
CO1	3								1		
CO2	1	3		1					2		1
CO3	1	3		1					2		1
CO4	1	3		1					1		1
CO5	2	2							1		

Mapping of Course Outcomes with Program Specific Outcomes:

CO/PSO	PSO1	PSO2
CO1	1	
CO2	2	
CO3	2	
CO4	2	
CO5	2	

UNIT – I

Operating Systems Overview: Operating system functions, Operating system structure, Operating systems operations, Computing environments, Open-Source Operating Systems. System Structures: Operating System Services, User and Operating-System Interface, systems calls, Types of System Calls, system programs, operating system structure, System Boot.

Case Study: The above topics are discussed as case study in Windows/ Unix OS

Practice:

1. Basic Linux commands
2. Implementation of System calls
3. Multiprogramming-Memory management-Implementation of fork (), wait (), exec() and exit (), System calls

UNIT – II

Process Concept: Process scheduling, Operations on processes, Inter-process communication.

Process Scheduling: Basic concepts, Scheduling criteria, Scheduling algorithms, Multiple processor scheduling, Thread scheduling.
Multithreaded Programming: Multithreading models, Thread libraries, Threading issues
Case Study: The above topics are discussed as case study in Windows/ Unix OS
Practice:
1. Simulate the following CPU scheduling algorithms:FCFS and SJF
2. Simulate the following CPU scheduling algorithms: Priority and Round Robin

UNIT – III
Inter-process Communication: Race conditions, Critical Regions, Mutual exclusion with busy waiting, Sleep and wakeup, Semaphores, Mutexes, Monitors, Message passing, Classical IPC Problems - Dining philosophers problem, Readers and writers problem.
Deadlocks: Resources, Conditions for resource deadlocks, Ostrich algorithm, Deadlock detection and recovery, Deadlock avoidance, Deadlock prevention.
Case Study: The above topics are discussed as case study in Windows/ Unix OS

Practice:
1. Simulate Bankers Algorithm for Dead Lock Avoidance
2. Write a C program that illustrates two processes communicating using shared memory.
3. Write C program to create a thread using pthreads library and let it run its function.
4. Write a C program to illustrate concurrent execution of threads using pthreads library

UNIT – IV
Memory-Management Strategies: Introduction, Swapping, Contiguous memory allocation, Paging, Segmentation.
Virtual Memory Management: Introduction, Demand paging, Copy on-write, Page replacement, Frame allocation, Thrashing, Memory-mapped files, Kernel memory allocation.
File Systems: Files, Directories, File system implementation, management and optimization.
Case Study: The above topics are discussed as case study in Windows/ Unix OS

Practice:
1. Simulate the Multiprogramming with a fixed number of tasks (MFT)
2. Simulate the Multiprogramming with a variable number of tasks (MVT)
3. Simulate the FIFO page replacement algorithm
4. Simulate the LRU page replacement algorithm
5. Simulate the following File allocation strategies: Sequenced, Indexed and Linked

UNIT – V
Secondary-Storage Structure: Overview of disk structure, and attachment, Disk scheduling, RAID structure, Stable storage implementation.
System Protection: Goals of protection, Principles and domain of protection, Access matrix, Access control, Revocation of access rights.
System Security: Introduction, Program threats, System and network threats.

Practice:
1. The above topics are discussed as case study in Windows/ Unix OS

Text Books:

1. Operating System Concepts, Abraham Silberschatz, Peter B Galvin and Greg Gagne, John Wiley and Sons Inc., 12th Edition. ISBN: 978-0470128725
2. William Stallings, Operating Systems: Internals and Design Principles. Prentice-Hall, 7th Edition.ISBN: 978-9332518803

Reference Books:

1. Modern Operating Systems, Tanenbaum A S, Pearson Education, 3rd Edition.ISBN: 978-0136006633
2. Operating Systems A Concept Based Approach, Dhamdhere D M, Tata McGraw-Hill, 3rd Edition.ISBN: 978-1259005589
3. Operating Systems, Nutt G,Pearson Educatio, 3rd Edition,. ISBN: 978-8131723593

Web Links:

1. https://archive.nptel.ac.in/courses/106/106/106106144/
2. https://archive.nptel.ac.in/courses/106/105/106105214/
3. https://www.coursera.org/learn/iot/lecture/MrgxS/lecture-3-1-operating-systems
4. https://in.udacity.com/auth?next=/course/introduction-to-operating-systems--ud923

Database Management Systems

(CE, EEE, ME, ECE, PT, Min.E., Ag.E.)

	L	T	P	C
Course Code: 2501IT05	**2**	**0**	**2**	**4**

Course Outcomes:

At the end of the course, student will be able to:

- **CO1:** Describe the Fundamental concepts of DBMS.
- **CO2:** Interpret relational database using SQL.
- **CO3:** Make use of normalization techniques for database design.
- **CO4:** Illustrate the mechanisms of transaction management.
- **CO5:** Optimize database performance with advanced indexing, query optimization, and ro backup and recovery strategies.

Mapping of Course Outcomes with Program Outcomes:

CO/PO	PO 1	PO 2	PO 3	PO 4	PO 5	PO 6	PO 7	PO 8	PO 9	PO 10	PO 11
CO1	3	3	3		1			1			
CO2	3	3	3	2	2	1		1			
CO3	3	3	3	3	3	2					1
CO4	3	3	3	1	2	1					
CO5	3	3	3	3	3	2					2

UNIT – I

Introduction to DBMS: History and Architecture, Data Independence, Data Models, Levels of abstraction, structure of DBMS.

Data Models : Concepts of Schema, Instance and data independence,Three tier schema architecture for data independence, Database system structure, environment, Centralized and Client Server architecture for the database.

Practice

1. Familiarization with installation of any DBMS.
2. Implementing a University Database System.

UNIT – II

Relational Model: Introduction to relational model, concepts of domain, attribute, tuple, relation, importance of null values, constraints (Domain, Key constraints, integrity constraints) and their importance

BASIC SQL: Simple Database schema, data types, table definitions (create, alter), different DML operations (insert, delete, update), basic SQL querying (select and project) using where clause, arithmetic & logical operations, SQL functions(Date and Time, Numeric, String conversion).

Practice

1. Querying and modifying the database using Data Manipulation Language commands -select, insert, update, delete.
2. Implementation of Aggregate Functions – sum, avg, min, max, count. Use group-by and having clause.

UNIT – III

Entity Relationship Model: Introduction, Representation of entities, attributes, entity set, relationship, relationship set, constraints, sub classes, super class, inheritance, specialization, generalization using ER Diagrams.

SQL: Creating tables with relationship, implementation of key and integrity constraints, nested queries, sub queries, grouping, aggregation, ordering, implementation of different types of joins, view(updatable and nonupdatable), relational set operations.

Practice

1. Perform join operations – natural join, equi-join, outer join, left outer join, right outer join, inner join and assess the impact of query plans on the performance of join heavy queries.
2. Perform set operations - union, intersection, set difference.
3. Implementation of corelated sub-queries and nested queries.
4. Creating and querying views and materialized views.

UNIT – IV

Normalization: Purpose of Normalization or schema refinement, concept of functional dependency, normal forms based on functional dependency (1NF, 2NF and 3 NF), concept of surrogate key, Boyce-codd normal form(BCNF), Lossless join and dependency preserving decomposition, Fourth normal form(4NF), Fifth Normal Form (5NF).

Transaction Concept: Transaction State, Implementation of Atomicity and Durability, Concurrent Executions, Serializability, Recoverability, Storage, Recovery and Atomicity, Recovery algorithm.

Practice

1. Implement SQL queries on a normalized database schema based on the provided schema. For this exampe: use the schema for a university database, which includes:

- Students (StudentID, StudentName, Major)
- Courses (CourseID, CourseName, Credits)
- Enrollments (StudentID, CourseID, EnrollmentDate)
- Instructors (InstructorID, InstructorName, Phone)
- Course_Instructors (CourseID, InstructorID)

2. (A)Implementation of Data Control Language commands – grant and revoke.
(B)Implementation of Transaction Control Language commands - commit, save point, and rollback.

UNIT – V

Indexing Techniques: Introduction, B+ Trees: Search, Insert, delete algorithms, File Organization and Indexing, Cluster Indexes, Primary and Secondary Indexes, Index data Structures, Hash Based Indexing: Tree base Indexing, Comparison of File Organizations.

Database Tuning: Introduction, Database Performance Tuning, Query Optimization: Introduction, Query Optimization algorithms, Backup and Recovery.

Practice

1. Create a Primary , Secondary Index on a Column.
2. Retrieve Data Using an Index.
3. Insert Data and Update Indexes.
4. Delete Data and Impact on Indexes.

<u>* Note:</u>The student must Complete & Submit a Database Foundations Certificate Course offered by Oracle Academy at the end of the Practice Session.

Text Books:

1 Database System Concepts ,Abraham Silberschatz, Henry Korth, and S. Sudarshan, McGraw-Hill , 8th Edition., ISBN-13: 978-1260230508.
2 Database Management Systems, Raghurama Krishnan, Johannes Gehrke, Mc Graw-Hill, 4th Edition, ISBN: 978-1260091195.

Reference Books:

1. Database Systems, RamezElmasri, Shamkant B. Navathe, 7th Edition, Pearson, ISBN: 978-0137504277.
2. Database Systems, Carlos Coronel, Steven Morris, Peter Rob, 10th Edition, Cengage, ISBN: 978-0357517864.
3. Introduction to Database Systems, C J Date, Pearson, 9th Edition, ISBN: 978-0133970777.

Web Links:

1 https://academy.oracle.com/pages/coursedescription/Oracle%20Academy%20Database%20Foundations%20Course%20Description.pdf
2 https://www.w3schools.com/sql/
3 https://onlinecourses.nptel.ac.in/noc22_cs91/

Computer Networks

(CE, EEE, ME, ECE, PT, Min.E., Ag.E.)

	L	T	P	C
Course Code: 2501CS07	**3**	**0**	**0**	**3**

Course Outcomes:
At the end of the course, student will be able to:

CO1: Describe network topologies, reference models and media for data transmission
CO2: Analyze error and flow control issues in data link layer
CO3: Classify MAC protocols and channelization techniques
CO4: Apply routing algorithms and congestion control techniques for effective data transmission
CO5: Analyze protocols Transport and Application Layers

Mapping of Course Outcomes with Program Outcomes:

CO/PO	PO 1	PO 2	PO 3	PO 4	PO 5	PO 6	PO 7	PO 8	PO 9	PO 10	PO 11
CO1	3	1									
CO2		2									
CO3		2							1	1	
CO4	1	2	2						2		1
CO5		1			1						1

Mapping of Course Outcomes with Program Specific Outcomes:

CO/PO	PSO1	PSO2
CO1	1	
CO2	2	
CO3	2	
CO4	2	
CO5	2	

UNIT – I
Network Overview: interfaces, protocols and services, connection-oriented and connectionless services, OSI & TCP/IP Reference Models. Local Area Networks: Topologies - star, bus, ring, media access control - deterministic and probabilistic, IEEE 802.x. wireless networking.

UNIT – II
Data Link Protocols: Framing and Data Transparency, Error Detection & Correction, Flow control.

UNIT – III
Media Access Control: Random Access: ALOHA, Carrier sense multiple access (CSMA), CSMA with Collision Detection, CSMA with Collision Avoidance, Controlled Access: Reservation, Polling, Token Passing, Channelization: frequency division multiple Access (FDMA), time division multiple access (TDMA), code division multiple access (CDMA).

UNIT – IV

Routing Algorithms: The Optimality principle, Shortest path, Flooding, Distance vector, Link state, Hierarchical, Congestion Control algorithms: General principles of congestion control, Congestion prevention polices, Approaches to Congestion Control, Traffic Aware Routing, Admission Control, Traffic Throttling, Load Shedding, Traffic Control Algorithm: Leaky bucket & Token bucket.

UNIT – V

IP Protocols: IP Addressing, IP & ICMP.
Transmission Control Protocol: UDP & TCP.
Application Layer: World Wide Web, HTTP, Electronic mail, Architecture, web based mail, email security, TELENET, local versus remote Logging, Domain Name System: Name Space, DNS, SNMP.

Additional Practice (Not considered for examination):

1. Write a Program to implement the data link layer farming methods such as i) Character stuffing ii) bit stuffing.
2. Write a Program to implement Sliding window protocols.
3. Programs to implements routing protocols like shortest path.
4. NS2 Simulator i. NS2 Simulator-Introduction ii. Simulate to Find the Number of Packets Dropped iii. Simulate to Find the Number of Packets Dropped by TCP/UDP.

Text Books:

1 Computer Networks — Andrew S Tanenbaum and David J Wetherall, Pearson Education, 5th Edition. ISBN: 978-0132126953
2 Data Communications and Networking – Behrouz A.Forouzan, McGraw Hill Education, 5th Edition ISBN: 978-1259064753

Reference Books:

1 Data Communications and Networks- Achut S Godbole, AtulKahate, McGraw-Hill Education (India) Pvt Limited, 2nd Edition. ISBN: 978-0-07-123110-7
2 Computer Networks, Mayank Dave, CENGAGE India, 6th Edition ISBN: 978-8131509869

Web Links:

1 https://nptel.ac.in/courses/106105081
2 https://www.coursera.org/learn/fundamentals-network-communications

Artificial Intelligence

(CE, EEE, ECE, PT, Min.E.)

	L	T	P	C
Course Code: 2501AI02	**2**	**0**	**1**	**3**

Course Outcomes: At the end of the Course, Student will be able to:

CO1: Illustrate the foundations, history, and applications of Artificial Intelligence using modern tools
CO2: Develop AI-based problem-solving models using Python
CO3: Implement search and optimization algorithms using Python libraries
CO4: Apply knowledge representation techniques using Python frameworks
CO5: Design simple intelligent systems and expert systems using Python

Mapping of Course Outcomes with Program Outcomes:

CO/PO	PO1	PO2	PO3	PO4	PO5	PO6	PO7	PO8	PO9	PO10	PO11
CO1	3			1				1	1		1
CO2	3	2		2				1	1		1
CO3	3	2	1	2	1			1	1		1
CO4	2		1					1	1		
CO5	2	2	1	1	1			1	1		1

Mapping of Course Outcomes with Program Specific Outcomes:

CO/PSO	PSO1	PSO2
CO1	1	
CO2	2	1
CO3	1	1
CO4	1	
CO5	1	1

Unit - I

Introduction to AI & Python Foundations

What is AI? Foundations and History of AI, AI Applications in real-world systems, Intelligent Agents and Environment, Rationality and Types of Agents, Fundamentals of Python for AI applications.

Practice (Python-based):

1. Implement simple AI agent (e.g., vacuum cleaner agent simulation)
2. Rule-Based AI Agent (Weather Decision Agent)

Unit – II

Problem Solving & Search Algorithms

Problem formulation and state space representation, Control strategies, Search strategies, Uninformed Search: BFS, DFS, Uniform Cost Search, Informed Search: Greedy, A* Algorithm, Heuristics and evaluation functions.

Practice (Python):

1. Implement DFS algorithm for Water Jug Problem

2. Solve Tic-Tac-Toe using BFS search strategy.
3. Implement A* Algorithm for pathfinding (e.g., grid navigation)

Unit – III
Optimization & Game Playing
Problem graphs, Matching, Indexing, Local Search Algorithms: Hill Climbing, Simulated Annealing, Optimization Problems, Searching with Nondeterministic Actions, Constraint Satisfaction Problems (CSP), Game Playing: Minimax Algorithm, Alpha-Beta Pruning

Practice (Python):
1. Solve 8-Puzzle using Hill Climbing
2. Implement Travelling Salesman Problem (TSP) using heuristic approach

Unit – IV
Knowledge Representation
Knowledge Representation Techniques, Propositional Logic & Predicate Logic, Inference & Resolution, Semantic Networks and Frames, Representation of knowledge through Planning generation Systems-K Strips Strategic explanations Why, why not and how explanations.

Practice (Python):
1. a) Implement Predicate Logic using Python (SymPy / logic module)
   b) Develop a Semantic Network (e.g., Animals or Transport)
2. Create a Frame-based system (Restaurant domain)

Unit – V
Expert Systems & Modern AI Applications
Expert Systems Architecture, Knowledge Acquisition & Representation, Meta knowledge, Rule-based Systems, Ethics in AI, Typical expert systems – EMYCIN, DART, XOON, Expert systems shells.

Practice (Python):
1. Build a Travel Recommendation Expert System
2. Develop a Student Career Guidance System

Text Books
1. Artificial Intelligence: A Modern Approach – Stuart Russell & Peter Norvig (need to add details)
2. Artificial Intelligence: Foundations of Computational Agents – Poole & Mackworth

Reference Books
1. Artificial Intelligence with Python – Prateek Joshi
2. Hands-On Machine Learning with Scikit-Learn & TensorFlow – Aurélien Géron
3. Python AI Projects for Beginners – Prateek Joshi

Web Resources

1. https://docs.python.org
2. https://nptel.ac.in/courses/106105077
3. https://nptel.ac.in/courses/106106126

Machine Learning
(CE, ECE, PT, Min.E.)

	L	T	P	C
Course Code: 2501AI05	**2**	**0**	**2**	**4**

Course Outcomes:
At the end of the course, student will be able to:

CO1: Outline the Concepts of Machine Learning and Statistical Learning
CO2: Build Regression and Classification models for given data.
CO3: Apply Instance based Learning techniques and SVM techniques linear and nonlinear data.
CO4: Apply clustering techniques on high dimensional data to group the similar entities.
CO5: Make use of ensemble learning techniques to improve the performance of a model.

Mapping of Course Outcomes with Program Outcomes:

CO/PO	PO 1	PO 2	PO3	PO 4	PO 5	PO 6	PO 7	PO 8	PO 9	PO 10	PO 11
CO1	2	2			2	2		1	1		
CO2	2	2	3		2	2		1	1		
CO3	3	2	3		2			1	1		2
CO4	3	2	3		2			1	1		
CO5	2	2	2		2			1	1		2

Mapping of Course Outcomes with Program Specific Outcomes:

CO/PSO	PSO1	PSO2
CO1		1
CO2		2
CO3		2
CO4		2
CO5		2

UNIT – I
Introduction:
Machine Learning, Types of Machine Learning Systems, Main Challenges of Machine Learning. Statistical Learning: Introduction, Supervised and Unsupervised Learning, The Learning Problem, Feasibility of Learning.

Practice :
1. Installation of Jupitar/Spider notebook and working on basic commands.
2. Loading and apply key preprocessing techniques on the dataset and also analyse the dataset.

UNIT – II

Supervised Learning(Regression/Classification):Basic Methods:

Concept Learning: General-to-Specific Hypotheses Ordering, Find-S and Candidate Elimination Algorithm, Version Space, and Inductive Bias.

Bayesian Learning: Probability Overview, MLE and MAP Estimates, Gaussian Naive Bayes Classifier, Bayesian Networks.

Instance-based Learning: k-Nearest Neighbour (kNN) Classifier, Voronoi Diagram and Distance-Weighted kNN, Distance Metrics and Curse of Dimensionality.

Practice :

1. Implement and demonstrate the FIND-S algorithm for finding the most specific hypothesis based on a given set of training data samples. Read the training data from a .CSV file.
2. For a given set of training data examples stored in a .CSV file, implement and demonstrate the Candidate Elimination algorithm to output a description of the set of all hypotheses consistent with the training examples.
3. Exercises to solve the real-world problems using Binary Classifier
4. Write a program to implement k-Nearest Neighbour algorithm to classify the iris data set. Print both correct andwrong predictions.

UNIT – III

Linear Models and Regression: Linear Classification, Linear Regression, Non-linear Transformation, Logistic Regression.

Support Vector Machines: Decision Boundary and Support Vector: Optimization and Primal-Dual Problem, Soft Margin and Non-linear Decision Boundary, Kernel Functions and Radial Basis Functions introduction.

Practice :

1. Exercises to solve the real-world problems using Linear Regression
2. Exercises to solve the real-world problems using Logistic Regression
3. Consider Patient Dataset. Apply linear classification technique(SVM) to identify the rate of heartpatients.

UNIT – IV

Classifier / Hypothesis Evaluation: Accuracy, Precision, Recall and F-Measures, Scores, Sampling, Bootstrapping and ROC, Hypotheses Testing and Cross-validation.

Unsupervised Learning:

Clustering : Partitional Clustering and Hierarchical Clustering, Cluster Types, Attributes and Salient Features,Hierarchical and Density-based Clustering Algorithms, Inter and Intra Clustering Similarity, Cohesion and Separation. MST and DBSCAN Clustering Algorithms.

Practice :

1. Develop a program for Bias, Variance, Remove duplicates , Cross Validation
2. Write a program to implement One-hot Encoding.
3. Write a program to implement Categorical Encoding.

UNIT – V

Ensemble Learning :

Bagging and Boosting, Adaboost and Random Forest ,

Computational Learning Theory : Error and Noise Formalisms, Training vs. Testing, Theory of Generalization,PAC Learnability and VC Dimensions , Overfitting, Regularization and Validation.

Practice :

1. Write a program to demonstrate the working of Random Forest classifier. Use appropriate dataset for Random Forest Classifier.
2. Use a sentiment analysis dataset from Twitter or other social media platforms, available on platforms like Kaggle and apply bagging and boosting techniques for prediction.

Additional Practice:

1. Assuming a set of documents that need to be classified, use the naïve Bayesian Classifier model toperform this task. Built-in Java classes/API can be used to write the program. Calculate the accuracy,precision, and recall for your data set.
2. Apply EM algorithm to cluster a Heart Disease Data Set. Use the same data set for clustering using kMeans algorithm. Compare the results of these two algorithms and comment on the quality of clustering.You can add Java/Python ML library classes/API in the program.

Corner Stone Project:

PROJECT 1: Intelligent Loan Risk Assessment System (End-to-End ML Pipeline)

Project Implementation, Documentation and Viva Voce

- **Implementation mainly focuses on**
  - Collecting and integrating multiple datasets (loan + financial history)
  - Advanced preprocessing (missing values, outliers, feature engineering)
  - Implementing multiple models (Logistic Regression, Random Forest, XGBoost)
  - Handling imbalanced data (SMOTE / resampling techniques)
  - Model evaluation using ROC-AUC, F1-score, cross-validation
  - Building a simple UI (Streamlit/Web app) for predictions
  - Model comparison and optimization
- **Documentation must contain**
  - Objective & real-world problem definition
  - Dataset merging and preprocessing pipeline
  - Feature engineering techniques
  - Model comparison and evaluation metrics
  - System architecture diagram
  - Screenshots (UI + outputs)
  - Enhancements (hyperparameter tuning, deployment)

PROJECT 2: Smart Disease Prediction System with Model Ensemble

- **Implementation mainly focuses on**
  - Using medical datasets (heart disease/diabetes/multi-disease)
  - Data preprocessing and feature selection

- Applying multiple classifiers (SVM, kNN, Random Forest, Gradient Boosting)
- Ensemble learning (Voting / Stacking models)
- Model evaluation using confusion matrix, ROC curves
- Explainability (feature importance / SHAP basics)
- Web-based prediction interface

• **Documentation must contain**

- Objective
- Dataset and preprocessing steps
- Model architecture and ensemble approach
- Evaluation metrics and comparison
- Screenshots (prediction system)
- Enhancements (multi-disease prediction)

PROJECT 3: Real-Time Sentiment Analysis System with Web Scraping

• **Implementation mainly focuses on**

- Scraping live data (Twitter/news using APIs or scraping tools)
- Text preprocessing (stopwords, stemming, vectorization – TF-IDF)
- Training models (Naïve Bayes, Logistic Regression, LSTM optional)
- Real-time sentiment prediction
- Visualization dashboard (charts for sentiment trends)
- Handling large-scale streaming data

• **Documentation must contain**

- Objective
- Data collection methodology (APIs/web scraping)
- NLP preprocessing pipeline
- Model building and evaluation
- Dashboard explanation
- Screenshots
- Enhancements (real-time alerts, topic modeling)

PROJECT 4: Heart Disease Prediction using SVM

• **Implementation mainly focuses on**

- Loading patient dataset
- Applying Support Vector Machine (SVM)
- Data preprocessing and feature scaling
- Classification of patients (disease/no disease)
- Model evaluation using confusion matrix

• **Documentation must contain**

- Objective
- Dataset description
- SVM working principle
- Evaluation metrics
- Output results
- Screenshots
- Enhancements (kernel comparison)

PROJECT 5: Customer Segmentation using Clustering

• **Implementation mainly focuses on**

- Loading customer dataset
- Applying K-Means clustering
- Identifying groups based on features

- Visualizing clusters using plots
- Comparing clustering results

• **Documentation must contain**
- Objective
- Dataset details
- Clustering technique explanation
- Cluster visualization
- Results interpretation
- Screenshots
- Enhancements (DBSCAN comparison)

PROJECT 6: Fake News Detection System using Machine Learning

• Implementation mainly focuses on
- Dataset collection (news datasets / scraping)
- Text preprocessing (tokenization, TF-IDF, n-grams)
- Applying classification models (Logistic Regression, SVM, Random Forest)
- Model evaluation using precision, recall, F1-score
- Comparing multiple models
- Building a simple interface for prediction

• **Documentation must contain**
- Objective
- Dataset description
- NLP pipeline
- Model comparison
- Evaluation metrics
- Screenshots
- Enhancements (deep learning models)

PROJECT 7: Sentiment Analysis using Ensemble Learning

• **Implementation mainly focuses on**
- Collecting dataset (Twitter/Kaggle)
- Text preprocessing
- Applying Bagging and Boosting techniques
- Training ensemble models (Random Forest / AdaBoost)
- Predicting sentiment (positive/negative)

• **Documentation must contain**
- Objective
- Dataset source
- Preprocessing steps
- Ensemble methods explanation
- Performance comparison
- Screenshots
- Enhancements (real-time data analysis)

PROJECT 8: Model Evaluation and Comparison System

• **Implementation mainly focuses on**
- Implementing multiple models (kNN, SVM, Regression)
- Performing cross-validation
- Calculating accuracy, precision, recall, F1-score
- Comparing model performance
- Visualizing results using graphs

• **Documentation must contain**

- Objective
- Models used
- Evaluation metrics explanation
- Comparison results
- Graphs and charts
- Screenshots
- Enhancements (hyperparameter tuning)

Text Books:

1 Hands On Machine Learning with ScikitLearn, Keras, and TensorFlow, 2nd Edition, O'Reilly Publications, 2019, ISBN: 978-1492032649
2 Data Science and Machine Learning Mathematical and Statistical Methods,Dirk P. Kroese, Zdravko I. Botev, Thomas Taimre, Radislav Vaisman, 2019, ISBN: 978-1138492530

Reference Books:

1 Machine Learning Probabilistic Approach, Kevin P. Murphy, MIT Press, ISBN: 9780262018029
2 Machine Learning Tools, Dr Muddafa Maruli Krishna, Dr A Vanathi, Final Thawaksr, Dr Lokesh P. Gangani, publisher: Book Rivers, ISBN: 978-93-5515-730-0

Web Links:

1 https://www.deeplearning.ai/machinelearningyearning/
2 https://www.cse.huji.ac.il/~shais/UnderstandingMachineLearning/index.html
3 https://onlinecourses.nptel.ac.in/noc21_cs24/preview

Note:

- Students must submit the Certificate of Completion offered by any Industry.
- The capstone project team size shall be four (4) students.
- Students may select any one of the above prescribed projects or a project of their own choice with the prior permission of the Course instructor.
- The SEE – Lab shall be evaluated for 50 marks based on project implementation, oral presentation, 10-minute video presentation, and viva voce.
- The video presentation should consist of the working procedure of the project along with contribution of each student for a minimum of 2 minutes.

Fundamentals of Data Science

(CE, EEE, ME, ECE, PT, Min.E., Ag.E.)

	L	T	P	C
Course Code: 2501CS34	**2**	**0**	**1**	**3**

Course Outcomes:
At the end of the course, student will be able to:

CO1: Explain fundamental concepts of Data Science.
CO2: Implement Data Collection and Preprocessing Techniques.
CO3: Demonstrate Proficiency in Data Loading, Storage, and File Handling
CO4: Conduct Exploratory Data Analysis (EDA) using Visualization and Statistical Techniques.
CO5: Make use of Neo4j, Cypher tools to manage and analyze graph data.

Mapping of Course Outcomes with Program Outcomes:

CO/PO	PO 1	PO 2	PO 3	PO 4	PO 5	PO 6	PO 7	PO 8	PO 9	PO 10	PO 11
CO1	2	3							2	2	
CO2	2								1	2	
CO3	2	2	2						2	2	
CO4	2	2			2				2	1	
CO5	3								1	1	

Mapping of Course Outcomes with Program Specific Outcomes:

CO/PSO	PSO1	PSO2
CO1	2	
CO2	1	
CO3	2	
CO4	2	
CO5	1	

UNIT – I

Introduction To Data Science: Definition and Scope of Data Science, History and Evolution of Data Science, Applications of Data Science, Data Science Lifecycle, Data Types and Structures, Tools and Technologies in Data Science.

Practice:

1. Importing and Exploring Datasets - Loading datasets using libraries and performing basic exploration.
2. Basic Data Structures - Working with data structures such as arrays, lists, data frames, and matrices

UNIT – II

Data Collection and Preprocessing: Data Collection Methods, Data Cleaning and Handling Missing Values, Data Transformation: Normalization and Standardization, Feature Engineering and Feature Scaling, Data Integration and Aggregation.

Practice:

1. Computing summary statistics like mean, median, mode, and standard deviation for a sample dataset.
2. Handling missing values and outliers in a dataset using techniques like imputation and filtering.

UNIT – III

Data Loading, Storage, and File Formats : Reading and Writing Data in Text Format, Reading Text Files in Pieces, Writing Data Out to Text Format, Manually Working with Delimited Formats, JSON Data, XML and HTML: Web Scraping, Binary Data Formats,Using HDF5 Format, Reading Microsoft Excel Files, Interacting with Databases, Storing and Loading Data in Mongo DB.

Practice:

1. Read data from a JSON file into a DataFrame using Pandas (pd.read_json) or R (jsonlite). Parse nested JSON structures and convert them into a flat table format.
2. Perform web scraping on an HTML page using BeautifulSoup in Python or rvest in R. Extract data from HTML tables and convert it into a DataFrame.

UNIT – IV

Exploratory Data Analysis (EDA): Descriptive Statistics, Data Visualization Techniques, Correlation and Covariance Analysis, Univariate, Bivariate, and Multivariate Analysis, Pattern Detection and Anomaly Identification.

Practice:

1. Plotting histograms and box plots to understand the distribution of a single variable.
2. Creating scatter plots and calculating correlation coefficients to study the relationship between two variables.

UNIT – V

Data Science Tools: Neo4j for dealing with graph databases, graph query language Cypher, libraries like nltk and SQLite for handling Text mining and analytics.

Practice:

1. Get hands-on experience with Neo4j to understand how to manage and query graph databases.
2. Practice writing Cypher queries to interact with graph data in Neo4j.

Text Books:

1	Python for Data Analysis ,Wes McKinney, O'REILLY, ISBN:978-1-449-31979-3, 1st edition, ISBN · 9781449319793.
2	Doing Data Science ,Rachel Schutt & O'neil, O'REILLY, ISBN:978-1-449-35865-5, 1st edition, ISBN: 9781449358655.

Reference Books:

1	Data Science from Scratch: First Principles with Python ,Joel Grus, O'Reilly Media. ISBN: 9781492041139.
2	Learning the Pandas Library: Python Tools for Data Munging ,Matt Harrison, Analysis, and Visualization , O'Reilly. ISBN: 9781787123137

Web Links:

1	https://onlinecourses.nptel.ac.in/noc24_cs68/preview
2	https://onlinecourses.nptel.ac.in/noc24_cs133/preview
3	https://www.geeksforgeeks.org/how-to-become-a-data-analyst-complete-roadmap/